THE Purevision™ Stoves COLLECTION

CHARLTON & JENRICK • SINCE 1986 •

Charlton & Jenrick LTD

THE

Purevision™ Stoves

COLLECTION

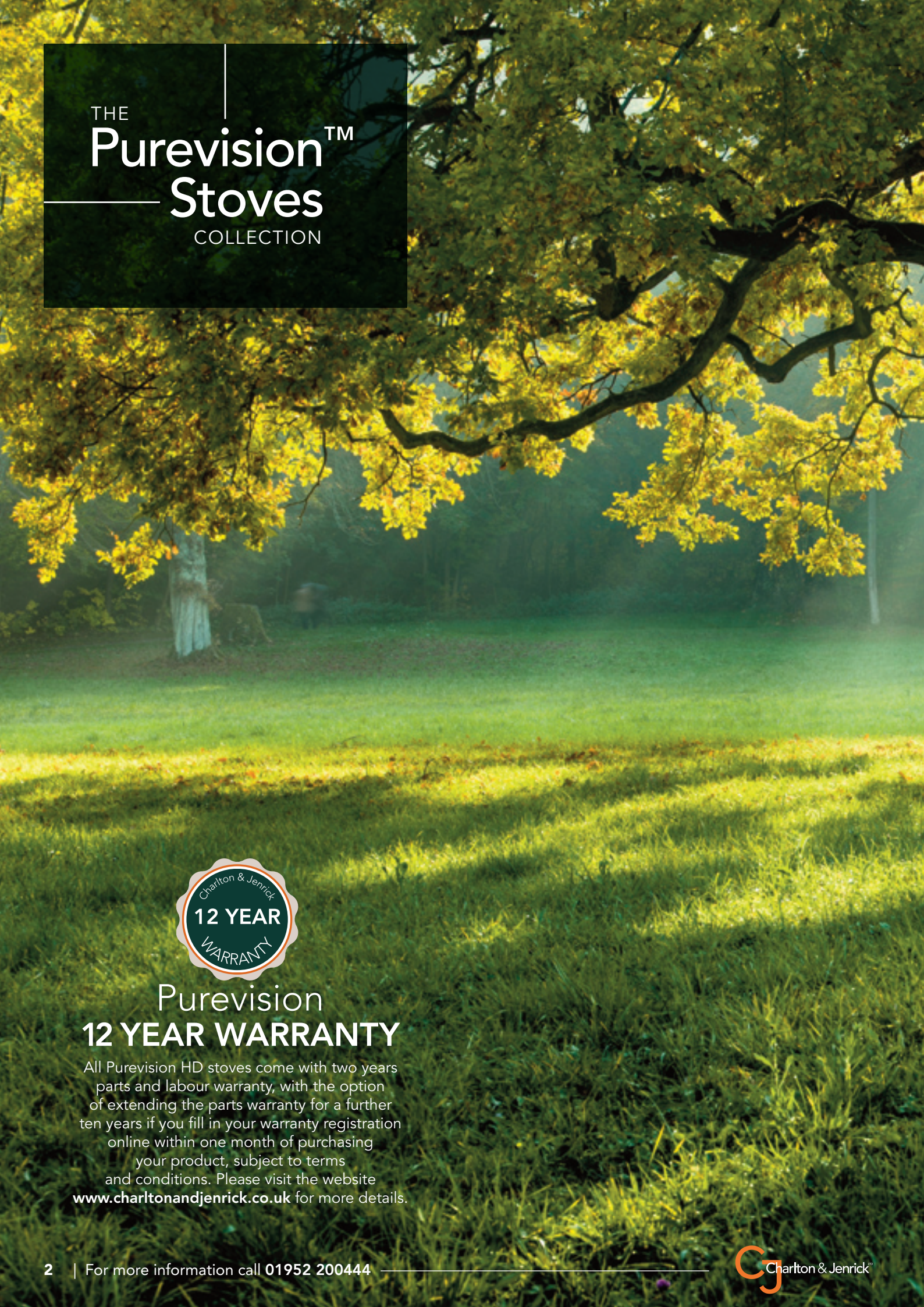

Charlton & Jenrick 12 YEAR WARRANTY

Purevision
12 YEAR WARRANTY

All Purevision HD stoves come with two years parts and labour warranty, with the option of extending the parts warranty for a further ten years if you fill in your warranty registration online within one month of purchasing your product, subject to terms and conditions. Please visit the website **www.charltonandjenrick.co.uk** for more details.

Introducing Purevision

The Purevision™ HD range from Charlton & Jenrick comprises a wide range of models including freestanding, inset, classical, linear and continental-style pedestal stoves. They contain technologically advanced patented design features that result in superb clean-burning performance and thermal efficiency of up to 82.5%.

Emissions meet EU leading Ecodesign levels, achieving the current emission and efficiency requirements for 2022 European Ecodesign standards. Defra exemption for wood-burning in a smokeless zone was a formality, with test results up to 97% below permitted levels of visible smoke. However, we have gone further than this with all of our stoves achieving the more stringent clearSkies Levels 4 or 5 certification standards.

Design parameters have been reset to produce a huge glass panel for fire viewing, the aesthetics of which blend seamlessly with traditional or modern rooms and fireplaces. The glass panel is kept clean by the extremely powerful airwash system.

Purevision™ HD is the result of Charlton & Jenrick's ongoing endeavours to improve the state of the art in wood-burning combustion chamber design. High Definition (HD) means an improved visual resolution over the previous standard and Purevision™ achieves this by harnessing the airwash and specialised tertiary air-profiling within the burn chamber for sharply defined flames and complete combustion.

EXPERIENCE REAL LIVING FLAMES IN
HIGH DEFINITION WITH **PUREVISION HD**.

Contents

6 Maximising the potential of your stove
8 Purevision™ Active Baffle System

Purevision™ Active Baffle Stoves:

Active Baffle

10 BPV5 Stove
12 BPV5 Slimline
14 BPV5W Stove
16 BPV5W Slimline Stove
18 BPV5 Countryman
20 BPV5 Countryman Slimline
22 BPV5W Countryman
24 BPV5W Countryman Slimline
26 BPV8 Stove
28 BPV5i Stove
30 BPV5iW Stove
32 CPV5W Classic Stove
34 CPV5W Classic Slimline Stove

Purevision™ Active Baffle Stoves:

Active Baffle

36 BPVR Cylinder Stove on Pedestal Stands
38 BPVR Cylinder Stove on Log Stores
40 BPVR Cylinder Stove in Inglenook

Purevision™ Linear Wood Burning Stoves:

42 LPV5 Linear
44 LPV8 Linear

Specifications, dimensions and performance:

46 Specifications
48 Dimensions
58 Performance data

Convection Stove Technology

Convector stove technology is an outer layer that creates a second skin around the main stove body, which contains the combustion chamber. Every Purevision Stove takes advantage of this technology, reducing heat loss out the side of the stove, and increasing thermal efficiency.

Look out for QR Codes on product pages to see product videos

Tertiary Air

Our patented tertiary air-profiling system delivers the clean combustion and high efficiency required to meet or exceed the 2022 European Ecodesign Directive, and clearSkies Levels 4 or 5 certifications. Every Purevision model uses this patented tertiary air profiling technology within the burn chamber, creating sharply defined flames and complete combustion. The patented tertiary air inlet system allows for rapid lighting and clean burning with minimal emissions.

Airwash

Powerful airwash that aids the clean burning of the stove to produce the High Definition (HD) flame picture. This unique air control system provides automatic air distribution from a simple single lever burning control to keep the glass clean and maintain the clear view of the flame picture.

This and all the other features on our Purevision stoves combine to help us achieve clearSkies level 4 or 5 certification levels, exceeding the minimum requirements set by the Ecodesign 2022 regulations.

Emissions and Performance Scheme explained

clearSkies is the new objective & independent emissions and energy performance certification mark for solid fuel stoves and fireplaces.

Originally initiated through the Stove Industry Association (SIA) and now an independent organisation, clearSkies purpose is to drive the development of cleaner and more efficient appliances and is open to all manufacturers of solid fuel stoves and fireplaces. The clearSkies board is made up of industry professionals, including representatives of the SIA, consultants and academics specialising in air quality and bioenergy. It is the only UK certification scheme that goes beyond the basic requirements of Ecodesign and includes Defra exemption.

clearSkies levels – how they work:

clearSkies appliances are awarded from entry level 2 up to a maximum of level 5 according to their emissions and UK Defra exemption status. All stoves of Level 3 and above also include UK Defra exemption for burning wood logs in smoke control areas.

Secure peace of mind – for today and tomorrow:

All C&J stoves achieve a minimum of clearSkies Level 4, and the vast majority achieve Level 5 to give you total peace of mind that you are investing in a state of the art wood burner with future proof performance. C&J are proud to have been amongst the founder members of the clearSkies scheme.

Scan the QR code for further details and our official product listings or visit: www.clearskiesmark.org/ ▶

SIA Ecodesign explained

The SIA (Stove Industry Association) used the services of a research company, Kiwa Gastec, whose report shows that modern clean burning Ecodesign stoves, including those in the Purevision range, can reduce particulate emissions by up to 90% compared to an open fire, and 80-84% compared to an old stove.

This finding is so important that SIA initiated and ran an 'Ecodesign Ready' labelling scheme to promote stoves meeting the efficiency and emissions regulations early. Since 2017, the industry's main manufacturers, including Charlton & Jenrick, have ensured that all newly designed wood burning stove models meet European environmental standards for particulate emissions.

Charlton & Jenrick invested in the design and development of the Purevision range of Ecodesign Ready stoves as long ago as 2013 to prepare for future tightening of regulations, with all stoves released for the last 10 years onwards meeting this certification criteria.

In doing so, new combustion optimisation ideas and techniques were perfected, resulting in a patent covering the tertiary air inlet system and several other innovations which were added within the products.

You can buy, safe in the knowledge that all the Purevision stoves you see in this brochure are certified **SIA Ecodesign certified** and **Defra Exempt for Wood Burning in Smokeless Zones**, as well as meeting the more stringent **clearSkies certifications**.

Maximising the potential of your stove

Refuelling your fire

Place the logs into the centre of the fire, away from the rear, sides, and glass. This helps keep the glass and liners clean and enhances the flame picture as the fire is centralised.

Use your stove gloves when operating the door handle, air controls of your stove, and placing logs into the fire. The gloves are designed to protect your hand for long enough to carefully place the log and avoid bumping the back and side bricks.

The right type of wood

The best fuel for stoves is hardwood logs with no more than 20% moisture content for the best burn.

Kiln dried or seasoned work equally as well, but they must be seasoned long enough to achieve low moisture levels.

Why dry wood?

Dry wood produces less smoke and more heat, and so is much cleaner and better for the environment.

Having a too high-water percentage will increase pollution, produce a poor level of heat output and cause tar to form in your chimney.

Negatives of solid fuel

- Potential to crystallise the glass
- Damaging the stove through corrosion
- Replacement spares will be required to be purchased more often
- Potential liner damage
- Shortens the life expectancy of the appliance.

Fuels not to use

- House Coal
- Painted or Preserved Wood
- Wet Wood
- Pallet Wood
- Newspaper and Card

Storing your firewood

You should store wood in a well vented, dry area that is away from the rain, this is because rain will eventually rot the wood.

You should always stack your firewood because this will help promote air circulation.

You must avoid storing firewood on a soil floor if outside, as the soil will rot the wood.

If you are cutting your own logs for firewood, store them in a dry area, and allow them to dry for at least 12 months, but for wood like oak this can be as long as 24 months.

How much do I need?

If you are going to use your stove on most evenings and at weekends from October to April, then 3 to 4 cubic meters per year is typical for most UK households.

Maintaining your stove

Cleaning the Glass on Your Stove

Use a specialist stove glass cleaner or newspaper dipped in vinegar to clean your glass. Never use an abrasive cloth or substance to clean the glass.

Having your chimney swept

You should have your chimney swept on a regular basis during the months it is in use. Having your chimney swept on a regular basis can help reduce acid corrosion.

Clean your stove accessories

It's not all just about your stove. Your various stove accessories also take a bit of bashing during regular use. Make sure to clean them to keep them in good working order.

Scan the QR code to see more in our complete stove guide

Purevision™
Active Baffle System

To enhance user experience and product adaptability, a truly unique innovation has been introduced by Charlton & Jenrick across the Purevision stove range. Our active baffle system helps to reduce any possible user frustration when starting up or refuelling the stove by allowing free entry flue flow when required but automatically restoring ideal firebox conditions during normal running.

On a cold crisp winter afternoon, there is nothing better than lighting up your wood stove and enjoying the glow of relaxing warmth around the fire as the evening draws in. Stop and think for a minute then of the column of cold, dense, static air that can form within an external flue system when still conditions and freezing temperatures cause equalisation inside and outside the duct. Chimneys only work by warm, less dense air rising within, thereby drawing in replacement air through the stove at the base. If there is no heat in the internal static air column and the density remains the same, then it simply will not move until pushed out. Lighting any stove can be difficult and slow in that situation because all highly efficient modern stoves reject less waste heat up into the flue, resulting in sluggish start-up with more smoke and emissions produced than desired.

Purevision Active Baffle Lever Settings

Overcoming this flue flow inertia in difficult conditions was once the preserve of dedicated skill, technique and initiative obtained by years of operational practice. Now though, it has never been easier and simpler than using the Purevision active baffle system. If conditions require it, simply switch the control lever into the Ignition position to open a dedicated through-flow channel, allowing initiation heat straight into the flue pipe for rapid gas acceleration. Once up and running with an established fire bed, switching back to the Automatic position allows the flue channel to open when the door is opened, assisting rapid evacuation of fresh fuel gases when refuelling.

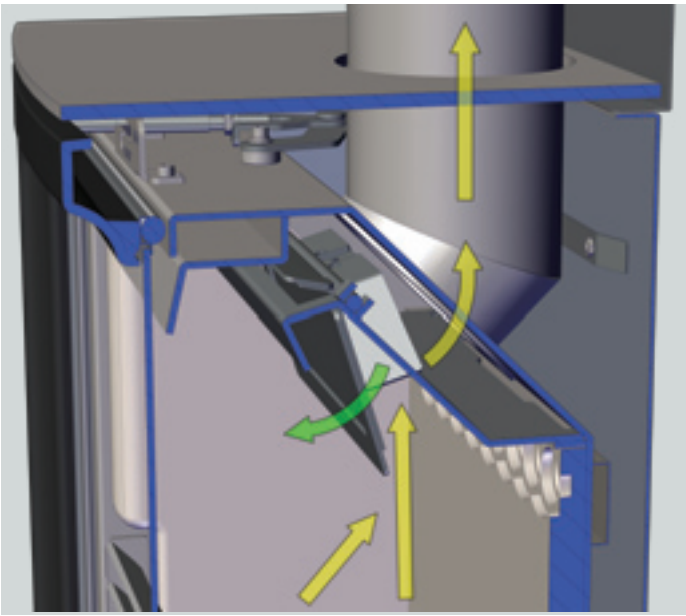

Baffle open – start-up flow

Once the door is closed again, firebox gas flow conditions are restored to optimal by the lever mechanism, allowing high thermal efficiency and complete combustion to be achieved. Should the facility not be required once the flue system is warm then the operating lever can be placed into the Closed position, returning the baffle to a static condition until active operation is next required.

Deliberately heavily manufactured in high grade tough and thick stainless steel, the system has been designed to be easy to maintain and have a durable lifetime. Simple practicalities of sweeping and cleaning have not been overlooked either, the unit being sensibly engineered to ensure that service access, such as

removing the baffle plate and other firebox items, does not require any tools. Considerable thought and design intent has also gone into easy set up and adjustment. A spring retracting solid stainless steel roller mechanism propels the baffle channel from open to closed and is easily adjustable with a single thread provided at the top of the firebox. The C&J active baffle system is supplied as standard on all Purevision stoves except Heritage models, both freestanding and inset.

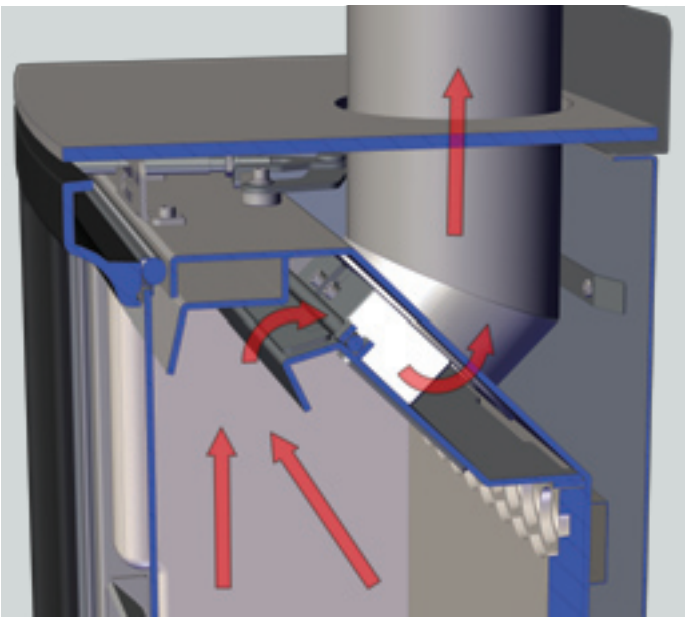

Baffle closed – normal running

With recent growth in the installation of new wood-burning stoves and additional external flue systems into properties, this innovation is sure to return dividends wherever temperature equalisation or resistance to start-up flue flow is likely to occur. Even in properties where any difficulty is very unlikely to occur, why compromise and go without this bespoke facility when it is available right across the broad Purevision range? High performance has become more commonplace with Ecodesign Certified stoves but easy operation, flexibility, adaptability and innovative solutions still need to be sought out – Purevision's active baffle system provides all of that and much more.

Scan the QR Code to see how the Active Baffle works and enables the smooth operation of the stove ▶

This technology has enabled us to meet all current legislation including EcoDesign 2022, clearSkies certification, and all C&J Stoves are Defra exempt for burning wood logs in smoke control areas.

SIA Ecodesign 2022 stoves are extremely efficient in comparison to older stoves as the infographic below from the Stove Industry Association demonstrates.

clearSkies is the objective and independent emissions and energy performance certification scheme for solid fuel stoves.

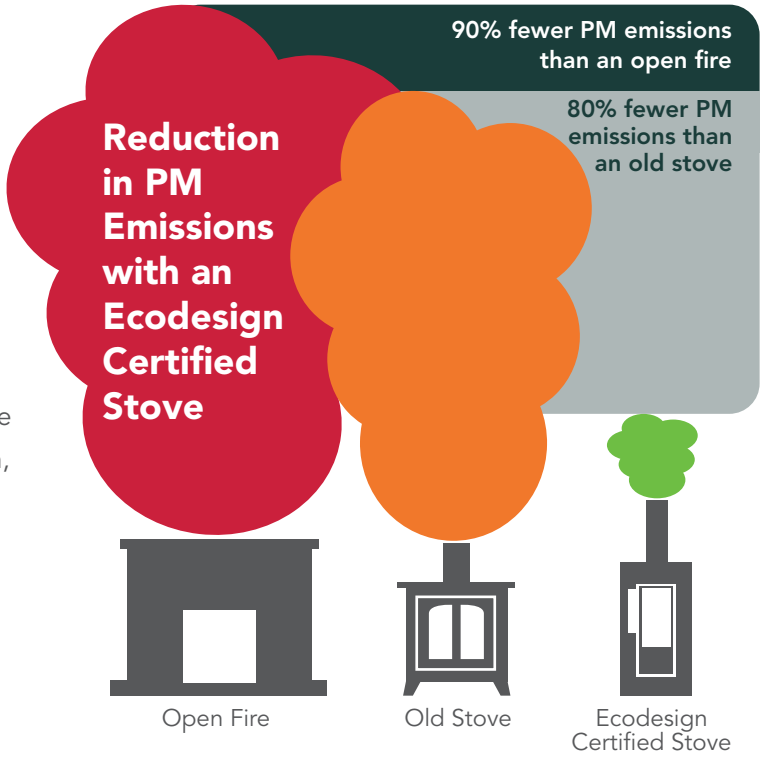

Purevision™
BPV5 Multi-fuel Stove

Stylishly elegant 5kW stove with a large glass window for optimal viewing of the high definition flames.

- SIA Ecodesign certified, Defra exempt for burning wood in smokeless zones, and clearSkies Level 5 certified
- Patented tertiary air-profiling system, contributing to clean combustion and high efficiency
- Powerful airwash that aids the clean burning of the stove to produce the High Definition (HD) flame picture
- Convection stove technology which helps to reduce heat loss around the side of the stove, making more efficient use of your fuel
- 3.1-6kW operating range
- Unique active baffle system for fast start-up and easier refuelling
- Optional external air kit for direct connection to the outside, potentially eliminating the need for fixed exterior ventilators in houses built after 2008
- High-quality cast ceramic firebox liners that are self-cleaning, hardwearing and extremely attractive
- Full multi-fuel capability as standard
- Optional stands or log stores
- Full-sized cast iron door.

BPV5 Freestanding Stove

BPV5 on 80mm Stand

BPV5 on 75mm Countryman Stand

BPV5 on 200mm Short Log Store

BPV5 on 400mm Midi Log Store

SCAN THE QR CODE TO SEE THE BPV5 STOVE IN ACTION ON YOUTUBE

BPV5 Freestanding Stove shown on a 1000 x 250mm Stove Bench

Active Baffle

BPV5 MULTI-FUEL FREESTANDING STOVE

SHOWN ON 400MM MIDI LOG STORE

Charlton & Jenrick 12 YEAR WARRANTY

Purevision™
BPV5 Slimline Multi-fuel Stove

The sleek design of the Purevision BPV5 Slimline combined with great fuel efficiency make these 5kW stoves perfect for modern, energy-conscious homes. This elegant 5kW stove features a large glass window for optimal viewing of the high-definition flames.

- SIA Ecodesign certified, Defra exempt for burning wood in smokeless zones, and clearSkies Level 5 certified
- Patented tertiary air-profiling system, contributing to clean combustion and high efficiency
- Powerful airwash that aids the clean burning of the stove to produce the High Definition (HD) flame picture
- Convection stove technology which helps to reduce heat loss around the side of the stove, making more efficient use of your fuel
- 3.9-6.8kW operating range
- Unique active baffle system for fast start-up and easier refuelling
- Optional external air kit for direct connection to the outside, potentially eliminating the need for fixed exterior ventilators in houses built after 2008
- High-quality cast ceramic firebox liners that are self-cleaning, hardwearing and extremely attractive
- Full multi-fuel capability as standard
- Optional stand and log store accessories give the stove added presence
- Full-sized cast iron door.

BPV5 Slimline
Freestanding Stove

BPV5 Slimline on
75mm Countryman Stand

BPV5 Slimline on
200mm Short Log Store

SCAN THE QR CODE TO SEE THE BPV5 SLIMLINE STOVE IN ACTION ON YOUTUBE

BPV5 Slimline Freestanding Stove on 75mm Countryman Stand

SIA STOVE INDUSTRY ASSOCIATION

clearSkies 5 clearskiesmark.org

Active Baffle

BPV5 SLIMLINE MULTI-FUEL FREESTANDING STOVE

ON 75MM COUNTRYMAN STAND

Charlton & Jenrick 12 YEAR WARRANTY

Purevision™
BPV5W Multi-fuel Stove

A stunning panoramic 5kW wide stove that shares all the features of the BPV5 with the additional benefits of accepting longer logs and greater fuel volumes.

- SIA Ecodesign certified, Defra exempt for burning wood in smokeless zones, and clearSkies Level 5 certified
- Patented tertiary air-profiling system, contributing to clean combustion and high efficiency
- Powerful airwash that aids the clean burning of the stove to produce the High Definition (HD) flame picture
- Convection stove technology which helps to reduce heat loss around the side of the stove, making more efficient use of your fuel
- 3.8-8kW operating range
- Unique active baffle system for fast start-up and easier refuelling
- Stainless steel bar handle, which is cooler to the touch and easy to use
- Heavy-duty stainless steel operating tool and stand for ease of use and attractive appearance
- Top and rear flue connection provides more flexibility when installing the stove
- Optional stands or log stores available.

BPV5W
Freestanding Stove

BPV5W
on 80mm Stand

BPV5W
on 75mm
Countryman Stand

BPV5W
on 200mm
Short Log Store

BPV5W
on 400mm
Midi Log Store

SCAN THE QR CODE
TO SEE THE BPV5W STOVE
IN ACTION ON YOUTUBE

BPV5W Freestanding Stove shown on 80mm Stand

Active Baffle

BPV5W MULTI-FUEL FREESTANDING STOVE

ON 75MM COUNTRYMAN STAND
SHOWN IN AN INGLENOOK
WITH GREY SLATE LINERS

Charlton & Jenrick 12 YEAR WARRANTY

Purevision™
BPV5W Slimline Multi-fuel Stove

The BPV5W Slimline is a stove with the same width and large glass viewing area as the PV5W on the previous page but with a shallower depth. This depth allows the stove to be located in the vast majority of UK fireplace openings. Being wide, the stove benefits from being able to accept longer logs for greater fuel volumes.

- SIA Ecodesign certified, Defra exempt for burning wood in smokeless zones, and clearSkies Level 4 certified
- Patented tertiary air-profiling system, contributing to clean combustion and high efficiency
- Powerful airwash that aids the clean burning of the stove to produce the High Definition (HD) flame picture
- 3.8-6.5kW operating range
- Convection stove technology which helps to reduce heat loss around the side of the stove, making more efficient use of your fuel
- Unique active baffle system for fast start-up and easier refuelling
- High-quality, hardwearing and self-cleaning ceramic firebox liners
- Full-sized cast iron door
- Optional short stand, countryman stand or log store available.

BPV5W Slimline
Freestanding Stove

BPV5W Slimline
on 80mm Stand

BPV5W Slimline
on 75mm Countryman Stand

BPV5W Slimline
on 200mm Short Log Store

Charlton & Jenrick™

SIA STOVE INDUSTRY ASSOCIATION

clearSkies 4

Active Baffle

BPV5W SLIMLINE MULTI-FUEL FREESTANDING STOVE

SHOWN ON A 200MM SHORT LOG STORE

Charlton & Jenrick 12 YEAR WARRANTY

Active Baffle

BPV5 COUNTRYMAN MULTI-FUEL STOVE

SHOWN ON 75MM COUNTRYMAN STAND IN AN INGLENOOK

Charlton & Jenrick 12 YEAR WARRANTY

Purevision™
BPV5 Countryman Multi-fuel Stove

A new approach to the highly successful Purevision lineup, this 5kW stove features a modern take on a classic design, looking as at home in a farmhouse inglenook as it does in a newly built town house.

- SIA Ecodesign certified, Defra exempt for burning wood in smokeless zones, and clearSkies Level 5 certified
- Patented tertiary air-profiling system, contributing to clean combustion and high efficiency
- Powerful airwash that aids the clean burning of the stove to produce the High Definition (HD) flame picture
- Convection stove technology which helps to reduce heat loss around the side of the stove, making more efficient use of your fuel
- Unique active baffle system for fast start-up and easier refuelling
- 3.1-6kW operating range
- Optional external air kit for direct connection to the outside, potentially eliminating the need for fixed exterior ventilators in houses built after 2008
- High-quality cast ceramic firebox liners that are self-cleaning, hardwearing and extremely attractive
- Full multi-fuel capability as standard
- Optional stand and log store accessories give the stove added presence
- Countryman Style door
- Full-sized cast iron door.

BPV5 Countryman Freestanding Stove

BPV5 Countryman on 75mm Countryman Stand

BPV5 Countryman on 80mm Stand

BPV5 Countryman on 200mm Short Log Store

BPV5 Countryman on 400mm Midi Log Store

Purevision™

BPV5 Countryman Slimline Multi-fuel Stove

A more compact version of the Countryman stove that is perfect for small chambers and inglenooks. Low emission combustion systems make this stove perfect for town or country living, achieving the clearSkies level 5 certification standard.

- SIA Ecodesign certified, Defra exempt for burning wood in smokeless zones, and clearSkies Level 5 certified
- Patented tertiary air-profiling system, contributing to clean combustion and high efficiency
- Powerful airwash that aids the clean burning of the stove to produce the High Definition (HD) flame picture
- Convection stove technology which helps to reduce heat loss around the side of the stove, making more efficient use of your fuel
- 3.9-6.8kW operating range
- Unique active baffle system for fast start-up and easier refuelling
- Optional external air kit for direct connection to the outside, potentially eliminating the need for fixed exterior ventilators in houses built after 2008
- High-quality cast ceramic firebox liners that are self-cleaning, hardwearing and extremely attractive
- Full multi-fuel capability as standard
- Optional stand and log store accessories give the stove added presence
- Countryman Style door
- Full-sized cast iron door.

BPV5 Countryman Slimline Freestanding Stove

BPV5 Countryman Slimline on 75mm Countryman Stand

BPV5 Countryman Slimline on 200mm Short Log Store

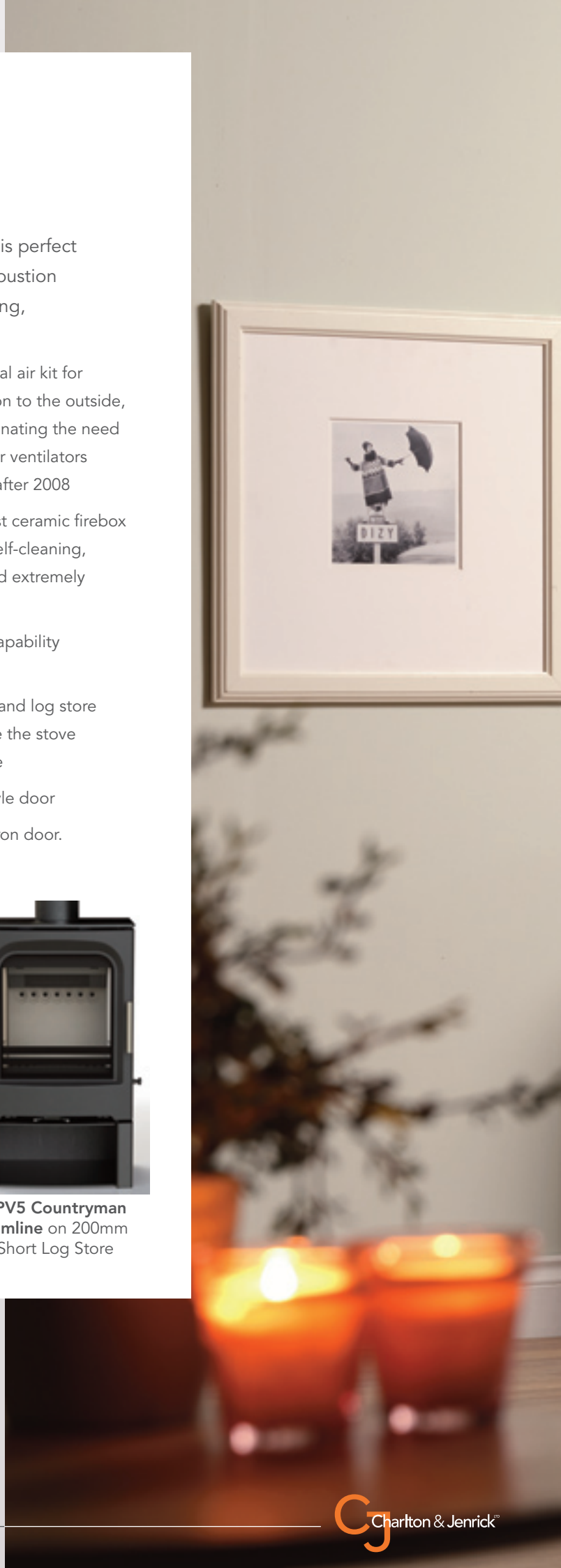

Active Baffle

BPV5 COUNTRYMAN SLIMLINE MULTI-FUEL FREESTANDING STOVE

SHOWN ON 200MM LOG STORE

Charlton & Jenrick 12 YEAR WARRANTY

Purevision™

BPV5W Countryman Multi-fuel Stove

A wider version of the new Purevision Countryman 5kW range offering a panoramic view of the flames within, this versatile design will complement traditionally styled or contemporary interiors alike.

- SIA Ecodesign certified, Defra exempt for burning wood in smokeless zones, and clearSkies Level 5 certified
- Patented tertiary air-profiling system, contributing to clean combustion and high efficiency
- Powerful airwash that aids the clean burning of the stove to produce the High Definition (HD) flame picture
- Convection stove technology which helps to reduce heat loss around the side of the stove, making more efficient use of your fuel
- 3.8-8kW operating range
- Unique active baffle system for fast start-up and easier refuelling
- Countryman Style door
- Stainless steel bar handle, which is cooler to the touch and easy to use
- Heavy-duty stainless steel operating tool and stand for ease of use and attractive appearance
- Top and rear flue connection provides more flexibility when installing the stove
- Optional stand and log store accessories give the stove added presence
- Optional external air kit for direct connection to the outside, potentially eliminating the need for fixed exterior ventilators in houses built after 2008
- Full multi-fuel capability as standard.

BPV5W Countryman

BPV5W Countryman on Countryman stand

BPV5W Countryman on 80mm Stand

BPV5W Countryman on 200mm Short Log Store

BPV5W Countryman on 400mm Midi Log Store

SCAN THE QR CODE TO SEE THE BPV5W COUNTRYMAN STOVE IN ACTION ON YOUTUBE

BPV5W Countryman on 75mm Countryman Stand in an Inglenook

Active Baffle

BPV5W COUNTRYMAN MULTI-FUEL FREESTANDING STOVE

SHOWN ON A 400MM MIDI LOG STORE

Charlton & Jenrick 12 YEAR WARRANTY

Purevision™

BPV5W Countryman Slimline Multi-fuel Stove

This stoves proportions mean that it looks fabulous in an Inglenook, a large fireplace or freestanding. There is a choice of two stands and a log store accessory to create a distinctive and purposeful profile.

- SIA Ecodesign certified, Defra exempt for burning wood in smokeless zones, and clearSkies Level 4 certified
- Patented tertiary air-profiling system, contributing to clean combustion and high efficiency
- Powerful airwash that aids the clean burning of the stove to produce the High Definition (HD) flame picture
- 3.8-6.5kW operating range
- Unique active baffle system for fast start-up and easier refuelling
- Countryman Style door
- Stainless steel bar handle, which is cooler to the touch and easy to use
- Heavy-duty stainless steel operating tool and stand for ease of use and attractive appearance
- Top and rear flue connection provides more flexibility when installing the stove
- Optional stand and log store accessories give the stove added presence
- Optional external air kit for direct connection to the outside, potentially eliminating the need for fixed exterior ventilators in houses built after 2008
- Full multi-fuel capability as standard
- Convection stove technology which helps to reduce heat loss around the side of the stove, making more efficient use of your fuel.

BPV5W Countryman Slimline Freestanding Stove

BPV5W Countryman Slimline on 75mm Countryman Stand

BPV5W Countryman Slimline on 80mm Stand

BPV5W Countryman Slimline on 200mm Short Log Store

SCAN THE QR CODE TO SEE THE BPV5W COUNTRYMAN SLIMLINE STOVE IN ACTION ON YOUTUBE

BPV5W Countryman Slimline on 75mm Countryman Stand

Active Baffle

BPV5W COUNTRYMAN SLIMLINE MULTI-FUEL FREESTANDING STOVE

Charlton & Jenrick 12 YEAR WARRANTY

Purevision™
BPV8 Multi-fuel Stove

The largest in the range, this stove offers our biggest fuel volume capacity and heat output for very large rooms and those who need a lot of heat.

- SIA Ecodesign certified, Defra exempt for burning wood in smokeless zones, and clearSkies Level 4 certified
- Patented tertiary air-profiling system, contributing to clean combustion and high efficiency
- Powerful airwash that aids the clean burning of the stove to produce the High Definition (HD) flame picture
- Convection stove technology which helps to reduce heat loss around the side of the stove, making more efficient use of your fuel
- 4.9-10kW operating range
- Unique active baffle system for fast start-up and easier refuelling
- Huge glass window offers the best possible view of the High Definition fire picture
- Adjustable feet, as fitted on all our freestanding models, facilitate installation on uneven surfaces
- All our freestanding models require only a 12mm superimposed hearth extending underneath and 230mm in front of the stove
- Stainless steel single air control lever not only looks fantastic but is cool to the touch, discreetly positioned and very easy to use
- Optional external air kit for direct connection to the outside, potentially eliminating the need for fixed exterior ventilators in the room.

BPV8
Freestanding Stove

BPV8
on 80mm Stand

BPV8 on 200mm
short Log Store

BPV8 on 400mm
Midi Log Store

SCAN THE QR CODE
TO SEE THE BPV8 STOVE
IN ACTION ON YOUTUBE

BPV8 Freestanding Stove shown on a 1200 x 350mm Stove Bench

Active Baffle

BPV8 MULTI-FUEL FREESTANDING STOVE

SHOWN ON A 400MM MIDI LOG STORE

Charlton & Jenrick 12 YEAR WARRANTY

Purevision™

BPV5i Inset Multi-fuel Stove

Based on the standard BPV5 freestanding stove, this inset model shares identical visual and performance features. This means you get the same window size, performance and features as you would with the freestanding model.

- SIA Ecodesign certified, Defra exempt for burning wood in smokeless zones, and clearSkies Level 5 certified
- Patented tertiary air-profiling system, contributing to clean combustion and high efficiency
- Powerful airwash that assists the clean burning of the stove in producing the High Definition (HD) flame picture
- Convection stove technology which helps to reduce heat loss around the side of the stove, making more efficient use of your fuel
- 3.1-6kW operating range
- Unique active baffle system for fast start-up and easier refuelling
- Clean aesthetic design that enables the stove to blend seamlessly with traditional or modern room and fireplace designs
- Unique air control system that provides automatic air distribution from a simple single-lever burning control
- Full multi-fuel capacity as standard
- Identical door design to the freestanding version.

BPV5i with 3 Sided Trim

BPV5i with 4 Sided Trim

Active Baffle

BPV5i 3 SIDED INSET MULTI-FUEL STOVE

SHOWN IN BECKFORD LIMESTONE SURROUND

Charlton & Jenrick 12 YEAR WARRANTY

Purevision™
BPV5iW Inset Multi-fuel Stove

This stove is a larger version of the BPV5i. It offers all the same attributes but gives a larger viewing window and fuel capacity, making it ideal for the larger living space.

- SIA Ecodesign certified, Defra exempt for burning wood in smokeless zones, and clearSkies Level 5 certified
- Patented tertiary air-profiling system, contributing to clean combustion and high efficiency
- Powerful airwash that aids the clean burning of the stove to produce the High Definition (HD) flame picture
- Convection stove technology which helps to reduce heat loss around the side of the stove, making more efficient use of your fuel
- Unique active baffle system for fast start-up and easier refuelling
- 3.8-8kW operating range
- Super high-quality cast ceramic firebox liners offer superior appearance and durability with self-cleaning characteristics
- Optimal top flue connection on all our inset models facilitates installation where lintels may obstruct other stoves
- Reduced clearances of 100mm from the legs of existing wooden surrounds as standard and 275mm from a wood mantel when using the optional deflector shield
- Full multi-fuel capability as standard
- Identical door design to the freestanding version.

BPV5iW with 3 Sided Trim

BPV5iW with 4 Sided Trim

Charlton & Jenrick

Active Baffle

BPV5iW 4 SIDED INSET MULTI-FUEL STOVE

SHOWN IN AYLESBURY
LIMESTONE SURROUND

Charlton & Jenrick 12 YEAR WARRANTY

Active Baffle

CPV5W CLASSIC MULTI-FUEL FREESTANDING STOVE

SHOWN IN A STAPLETON LIMESTONE SURROUND WITH RUSTIC BRICK LINERS

Charlton & Jenrick 12 YEAR WARRANTY

Purevision™
CPV5W Classic Multi-fuel Stove

Stylish and elegant with classical looks, the CPV5W is a solid, heavy-duty stove with a huge glass fire viewing window for optimal viewing of flames. The larger CPV5W retains a nominal output of 5kW, but provides a wider operating range, making it ideal for larger living spaces.

- SIA Ecodesign certified, Defra exempt for burning wood in smokeless zones, and clearSkies Level 5 certified
- Patented tertiary air-profiling system, contributing to clean combustion and high efficiency
- Powerful airwash that aids the clean burning of the stove to produce the High Definition (HD) flame picture
- Convection stove technology which helps to reduce heat loss around the side of the stove, making more efficient use of your fuel
- 3.8-8kW operating range
- Unique active baffle system for fast start-up and easier refuelling
- Heavy-duty stainless steel operating tool and stand for ease of use and attractive appearance
- Optional external air kit for direct connection to the outside
- High-quality cast iron top plate, top blanking plate for rear flue connections and base unit (pre-fitted) with adjustable feet for levelling, providing flexibility when installing the stove
- High-quality ceramic firebox liners that are self-cleaning, hardwearing and very attractive
- Full multi-fuel capacity as standard, so no kits or adaptors needed for burning smokeless fuels.

CPV5W Classic
Freestanding Stove

Purevision™
CPV5W Classic Slimline Multi-fuel Stove

This model is a wide Classic stove with a wide, large viewing glass window like the CPV5W but is shallower in depth and slightly shorter. These slightly reduced dimensions mean the stove is able to fit into more environments whilst still offering the same performance and look.

- SIA Ecodesign certified, Defra exempt for burning wood in smokeless zones, and clearSkies Level 4 certified
- Patented tertiary air-profiling system, contributing to clean combustion and high efficiency
- Powerful airwash that aids the clean burning of the stove to produce the High Definition (HD) flame picture
- Convection stove technology which helps to reduce heat loss around the side of the stove, making more efficient use of your fuel
- 3.8-6.5kW operating range
- Unique active baffle system for fast start-up and easier refuelling
- High-quality cast iron top plate and top blanking plate for rear flue connections
- The base unit is pre-fitted to the stove and comes with adjustable feet for levelling
- High-quality ceramic firebox liners that are self-cleaning, hardwearing and attractive.

CPV5W Classic Slimline
Freestanding Stove

Charlton & Jenrick

Active Baffle

CPV5W CLASSIC SLIMLINE MULTI-FUEL FREESTANDING STOVE

SHOWN IN AN INGLENOOK

Charlton & Jenrick 12 YEAR WARRANTY

Active Baffle

BPVR CYLINDER MULTI-FUEL STOVE

SHOWN ON 242MM
LOW PEDESTAL STAND

Charlton & Jenrick 12 YEAR WARRANTY

Charlton & Jenrick

Purevision™

BPVR Cylinder Multi-fuel Stove on Pedestal Stand

For that stylish continental look there is a choice of a high and low pedestal stand for the BPVR Cylinder stove.

- SIA Ecodesign certified, Defra exempt for burning wood in smokeless zones, and clearSkies Level 5 certified
- Patented tertiary air-profiling system, contributing to clean combustion and high efficiency
- Powerful airwash that aids the clean burning of the stove to produce the High Definition (HD) flame picture
- Convection stove technology which helps to reduce heat loss around the side of the stove, making more efficient use of your fuel
- 3.2-6.8kW operating range
- Unique active baffle system for fast start-up and easier refuelling
- Up to 180° panoramic ceramic glass window for unbeatable fire view
- 100% unrestricted fire view with no side window pillars, see the fire from all around when fitted against a flat wall – no need for swivelling base or flue connector
- 70mm rear clearance from combustibles
- 200mm side clearance for combustible corner installations
- Cast iron fire base plate for wood burning included
- Stainless steel ash rake included
- Multi-fuel cast iron bar grate included.

BPVR Cylinder Stove on 242mm Low Pedastal Stand

BPVR Cylinder Stove on 477mm High Pedastal Stand

BPVR Cylinder Stove on 477mm High Pedestal Stand

SCAN THE QR CODE TO SEE THE BPVR STOVE IN ACTION ON YOUTUBE

Purevision™

BPVR Cylinder Multi-fuel Stove on Log Store

For that stylish continental look combined with practicality there's a choice of a high and low logstores with door for the BPVR Cylinder stove.

- SIA Ecodesign certified, Defra exempt for burning wood in smokeless zones, and clearSkies Level 5 certified
- Patented tertiary air-profiling system, contributing to clean combustion and high efficiency
- Powerful airwash that aids the clean burning of the stove to produce the High Definition (HD) flame picture
- Convection stove technology which helps to reduce heat loss around the side of the stove, making more efficient use of your fuel
- 5kW nominal output with approximate operating range from 3.2-6.8kW
- Unique active baffle system for fast start-up and easier refuelling
- Extra-wide door opening for cleaning and servicing firebox access
- Cool touch solid stainless steel handle
- High-quality stove gloves provided
- Easy reach option to use multi tool to extend door handle
- Solid heavy-duty stainless steel multi tool and laser-profiled stand included
- Schott Robax™ curved ceramic glass panel
- Choice of high or low log stores.

BPVR Cylinder stove on 230mm Low Log Store with Door

BPVR Cylinder stove on 465mm High Log Store with Door

BPVR Cylinder Stove on 230mm Low Log Store with Door

Charlton & Jenrick

Active Baffle

BPVR CYLINDER MULTI-FUEL STOVE

SHOWN ON 465MM HIGH LOG STORE WITH DOOR

Charlton & Jenrick 12 YEAR WARRANTY

Purevision™
BPVR Cylinder Multi-fuel Stove in Inglenook

For that stylish continental look combined with practicality there is a choice of a high and low logstores with door for the BPVR Cylinder stove.

- SIA Ecodesign certified, Defra exempt for burning wood in smokeless zones, and clearSkies Level 5 certified
- Patented tertiary air-profiling system, contributing to clean combustion and high efficiency
- Powerful airwash that aids the clean burning of the stove to produce the High Definition (HD) flame picture
- Convection stove technology which helps to reduce heat loss around the side of the stove, making more efficient use of your fuel
- 3.2-6.8kW operating range
- Unique active baffle system for fast start-up and easier refuelling
- Automatic door latch for effortless secure closure of door
- Huge panoramic window height and width to enjoy the full flame picture
- Multi-fuel capable for optional smokeless fuel use
- External air kit option for 100% external air intake
- Rear or base external air connection options
- Single air control for all operations
- Heavy-duty engineering and seam welded laser profile construction
- Stainless steel 'shovel' ash pan solution.

BPVR Cylinder Stove

Charlton & Jenrick™

Active Baffle

BPVR CYLINDER MULTI-FUEL STOVE

SHOWN IN AN INGLENOOK

Charlton & Jenrick 12 YEAR WARRANTY

Purevision™
LPV5 Linear Wood-Burning Stove

Featuring a modern, continental design the Purevision LPV5 Linear stove is the perfect addition to any modern interior. Three sides of glass enhance the viewing angles of the flames, creating a more relaxing viewing experience.

- SIA Ecodesign certified, Defra exempt for burning wood in smokeless zones, and clearSkies Level 5 certified
- Patented tertiary air-profiling system, contributing to clean combustion and high efficiency
- Powerful airwash that aids the clean burning of the stove to produce the High Definition (HD) flame picture
- Convection stove technology which helps to reduce heat loss around the side of the stove, making more efficient use of your fuel
- 3.8-7.1kW operating range
- Unique active baffle system for fast start-up and easier refuelling
- Special Infra-Red reflective coated ceramic glass for optimum combustion conditions at variable burn-rates
- Top and rear flue connection provides more flexibility when installing the stove
- Optional external air kit for direct connection to the outside, potentially eliminating the need for fixed exterior ventilators in houses built after 2008
- Wood-burning only
- Compatible with log store, leg stand, pedestal, wall mounting bracket and pedestal stand with soft close drawer.

LPV5 Linear Stove

LPV5 Linear Stove on 205mm Leg Stand

LPV5 Linear Stove on 210mm Pedestal Stand

LPV5 Linear Stove on 350mm Log Store

LPV5 Linear Stove on Wall Mounting Bracket

LPV5 Linear Stove shown wall mounted using Wall Mounting Bracket

SCAN THE QR CODE TO SEE THE LPV5 LINEAR WOOD-BURNING STOVE IN ACTION ON YOUTUBE

Active Baffle

Optional Stainless Steel Door Handles

LPV5 LINEAR WOOD-BURNING STOVE

SHOWN ON 210MM PEDESTAL STAND

Charlton & Jenrick 12 YEAR WARRANTY

Purevision™
LPV8 Linear Wood-Burning Stove

The Purevision Linear LPV8 creates a modern focal point and sense of occasion for any setting, with three sides of glass giving you a panoramic view of the flames from all angles. It can also be combined with leg stands, log stores, pedestal stands, and wall mounting bracket accessories to tailor the stove to your tastes.

- SIA Ecodesign certified, Defra exempt for burning wood in smokeless zones, and clearSkies Level 4 certified
- Patented tertiary air-profiling system, contributing to clean combustion and high efficiency
- Powerful airwash that aids the clean burning of the stove to produce the High Definition (HD) flame picture
- Convection stove technology which helps to reduce heat loss around the side of the stove, making more efficient use of your fuel
- 5-9.9kW operating range
- Unique active baffle system for fast start-up and easier refuelling
- Special Infra-Red reflective coated ceramic glass for optimum combustion conditions at variable burn-rates
- Top and rear flue connection provides more flexibility when installing the stove
- Optional external air kit for direct connection to the outside, potentially eliminating the need for fixed exterior ventilators in houses built after 2008
- Wood-burning only
- Compatible with log store, leg stand, pedestal, wall mounting bracket and pedestal stand with soft close drawer.

LPV8 Linear Stove

LPV8 Linear Stove on 205mm Leg Stand

LPV8 Linear Stove on 210mm Pedestal Stand

LPV8 Linear Stove on 350mm Log Store

LPV8 Linear Stove on Wall Mounting Bracket

SCAN THE QR CODE TO SEE THE LPV8 LINEAR WOOD-BURNING STOVE IN ACTION ON YOUTUBE

LPV8 Linear Stove shown on 305mm Log Store

Active Baffle

Optional Stainless Steel Door Handles

LPV8 LINEAR WOOD-BURNING STOVE

SHOWN ON 205MM LEG STAND

Charlton & Jenrick 12 YEAR WARRANTY

Purevision™
Stove Specifications

Model	BPV5	BPV5-SLIM/ Countryman Slim	BPV5W	BPV5W-SLIM/ Countryman Wide Slim	BPV8	BPV5 Countryman	BPV5W Countryman
Fuel:	Solid Fuel or Wood	Solid Fuel or Wood	Solid Fuel or Wood	Solid Fuel or Wood	Solid Fuel or Wood	Solid Fuel or Wood	Solid Fuel or Wood
Flue:	Top & Rear	Top & Rear	Top & Rear	Top & Rear	Top & Rear	Top & Rear	Top & Rear
Flue Diameter:	127mm (5")	127mm (5")	127mm (5")	127mm (5")	127mm (5")	127mm (5")	127mm (5")
Appliance Gross Weight (kg):	105	94	120	105	153	110	125
Efficiency (%) wood/solid fuels:	80.2/82.0*	79/80.9*	82.2/78.2*	77.1/82.5*	76.7/80.0*	80.2/82.0*	82.2/78.2
Declared Nominal Output (kW):	5	5	5	5	8.5	5	5
Approximate output range (kW):	3.1-6.8	3.9-6.8	3.8-8	3.8-6.5	4.9-10	3.1-6.8	3.8-8
Distance to combustibles (mm):	Rear 100 Side 250	Rear 100 Side 200	Rear 150 Side 250	Rear 150 Side 250	Rear 200 Side 300	Rear 100 Side 250	Rear 150 Side 250
Distance to non-combustibles (mm):**	Rear 50 Top & Side 50	Rear 50 Top & Side 50	Rear 50 Top & Side 50	Rear 50 Top & Side 50	Rear 50 Top & Side 50	Rear 50 Top & Side 50	Rear 50 Top & Side 50
Max Log Length (mm):	300	300	400	400	400-650	300	400
EEI Classification for ecolabelling:	A	A	A+	A	A	A	A+
clearSkies Level:	5	5	5	4	4	5	5

* For Multi-fuel Stoves figures ** Minimum clearances required. Heat output would be improved with a 150mm gap

CPV5W	CPV5W-SLIMLINE	BPVR CYLINDER	LPV5	LPV8	BPV5i	BPV5iW
Solid Fuel or Wood	Solid Fuel or Wood	Solid Fuel or Wood	Wood Logs	Wood Logs	Solid Fuel or Wood	Solid Fuel or Wood
Top & Rear	Top & Rear	Top & Rear	Top & Rear	Top & Rear	Top	Top
127mm (5")	127mm (5")	127mm (5")	127mm (5")	127mm (5")	127mm (5")	127mm (5")
146	130	94	96	132	91	109
82.2/78.2*	77.1/82.5*	76.8/81.8*	79.6	76.5	80.2/82.0*	82.2/78.2
5	5	5	5	8	5	5
3.8-8	3.8-6.5	3.2-6.8	3.8-7.1	5-9.9	3.1-6	3.8-8
Rear 150 Side 250	Rear 150 Side 250	Rear 175 Side 400	Rear 80 Side 650	Rear 200 Side 750	Top 250 Side 150	Top 275 Side 100
Rear 50 Top & Side 50	Rear 50 Top & Side 50	Rear 50 Top & Side 50	Rear 50 Top & Side 50	Rear 50 Top & Side 50	–	–
400	400	300	320	550	300	400
A+	A	A	A	A	A	A+
5	4	5	5	4	5	5

Purevision™
— BPV Stove Dimensions

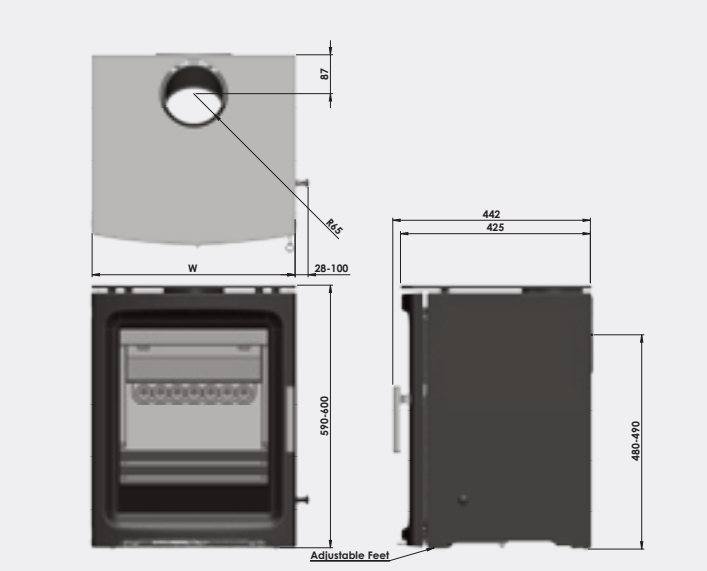

BPV5 W=454mm **BPV5W** W=554mm

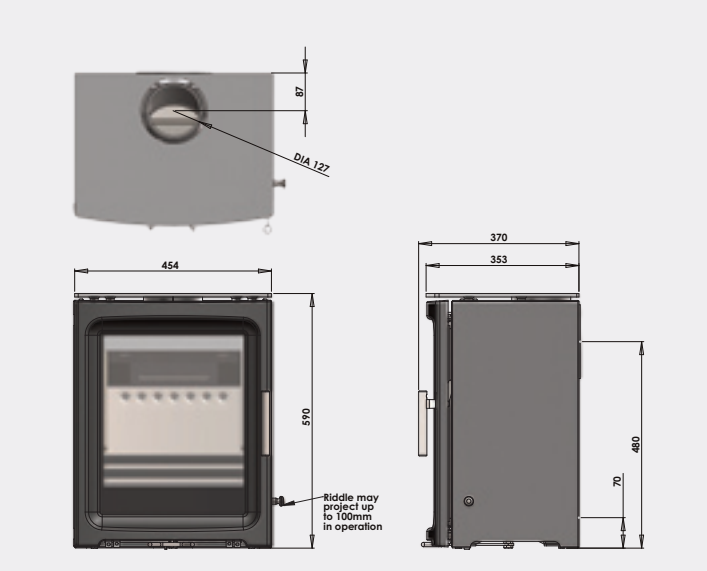

BPV5 Slimline

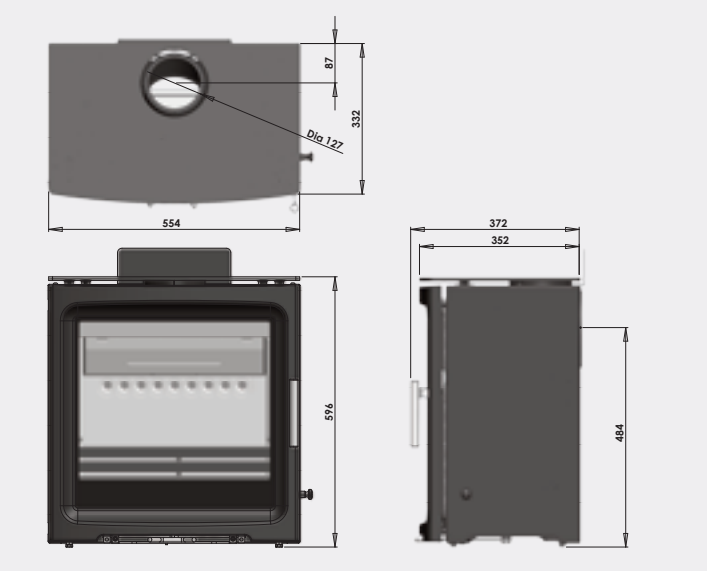

BPV5W Slimline

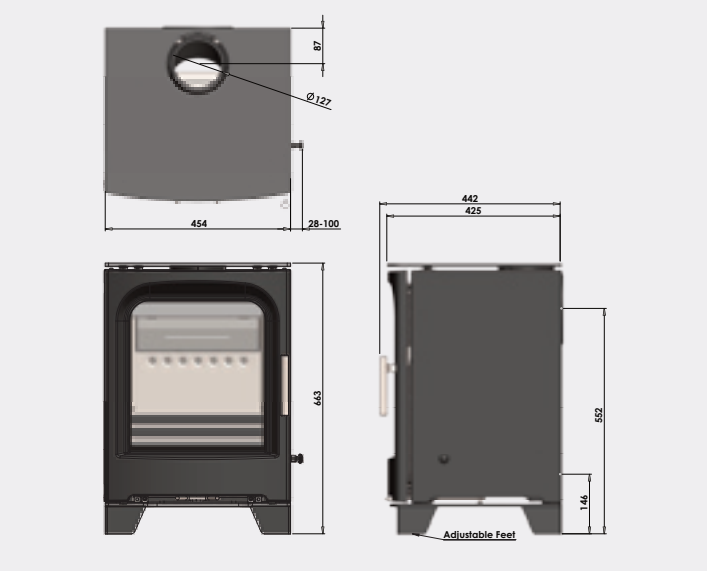

BPV5 Countryman

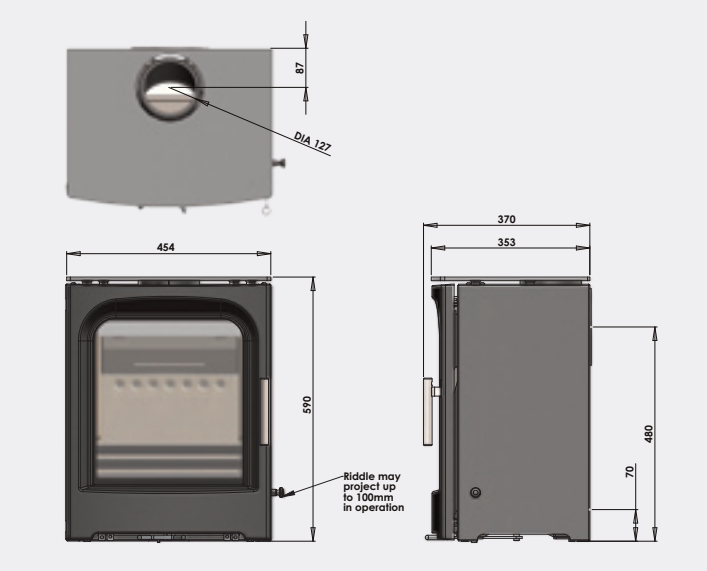

BPV5 Countryman Slimline

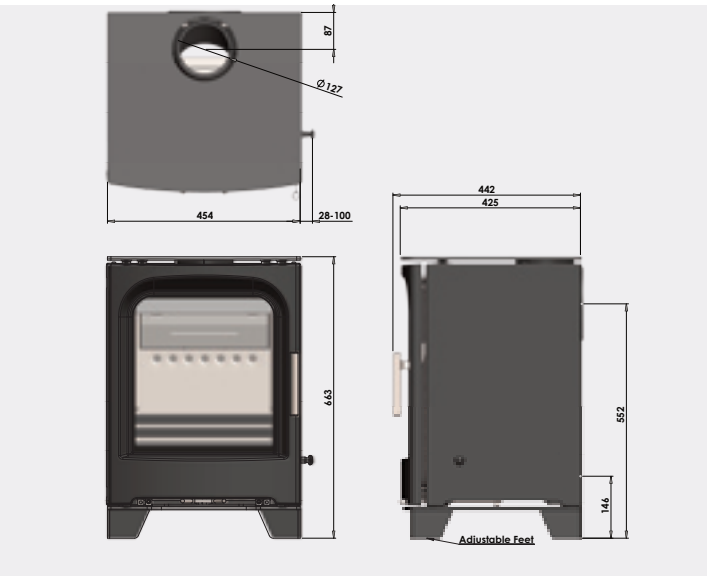

BPV5W Countryman

Charlton & Jenrick

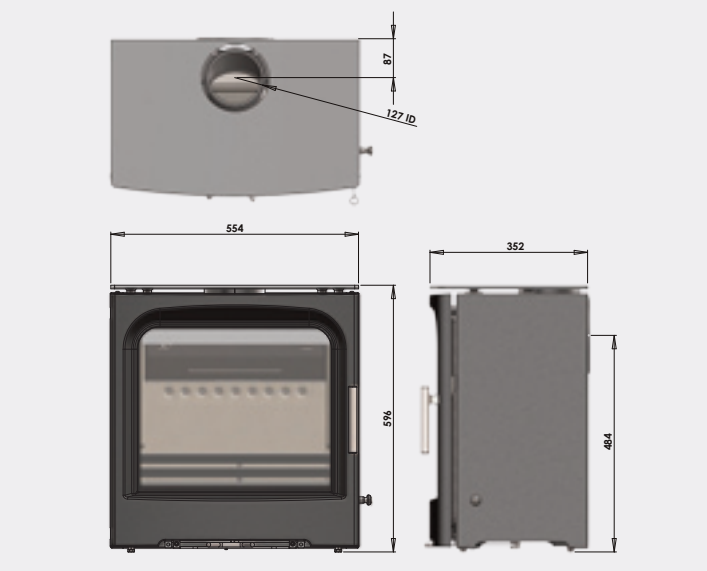

BPV5W Countryman Slimline

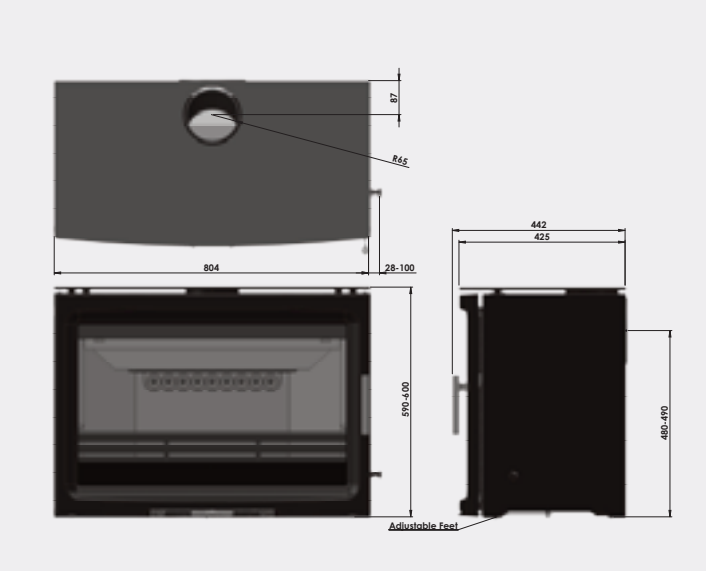

BPV8

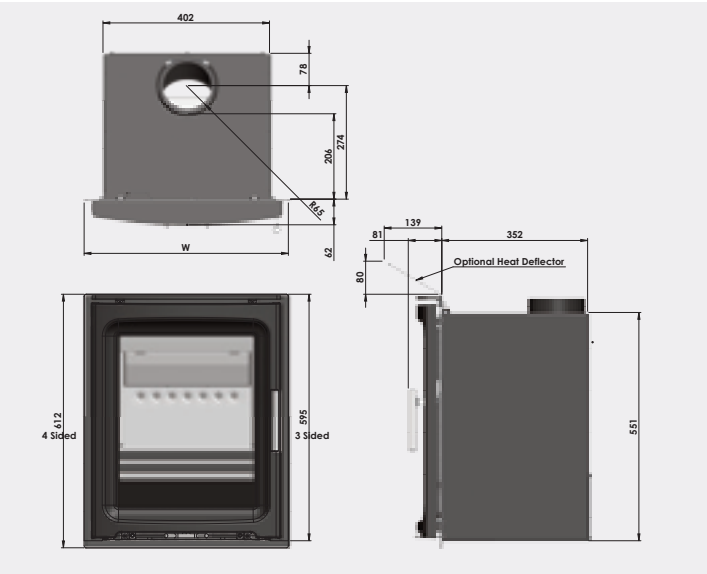

BPV5i W=493mm **BPV5iW** W=593mm

Purevision™
BPV Log Store Dimensions

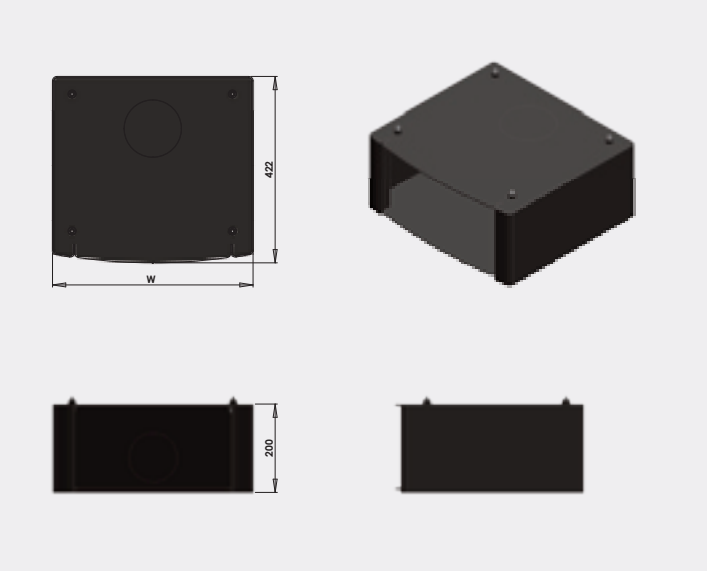

BPV5 Short Log Store W=454mm **BPV5W** W=554mm **BPV8** W=804mm

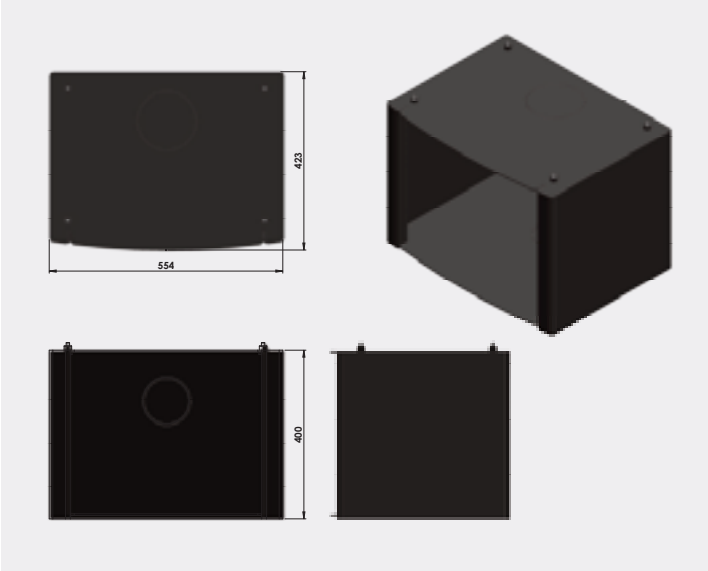

BPV5 Midi Log Store W=454mm **BPV5W** W=554mm **BPV8** W=804mm

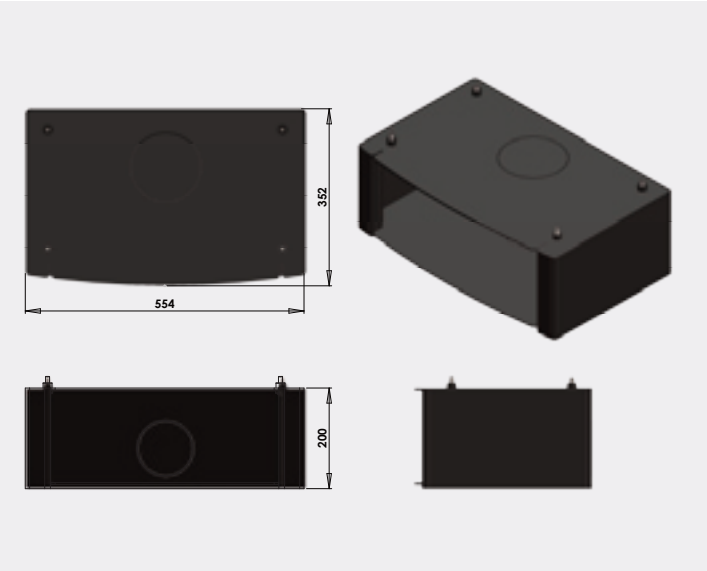

BPV5W Slimline Short Log Store

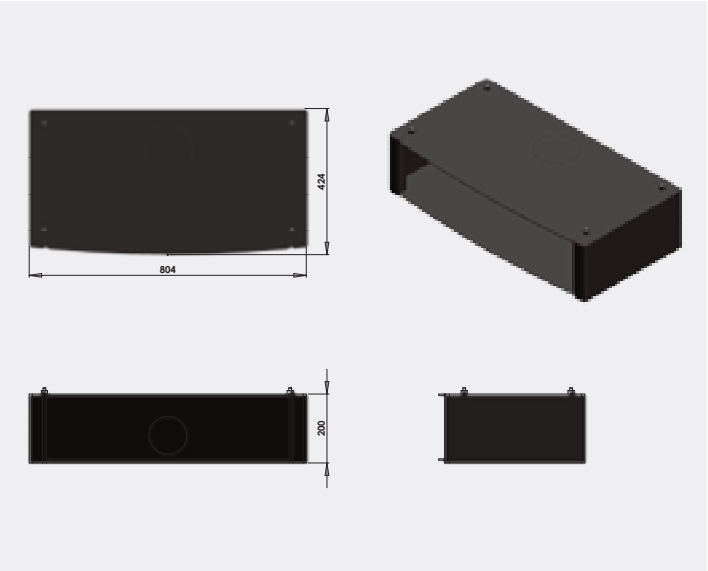

BPV8 Short Log Store

Purevision™
BPV Stove Stand Dimensions

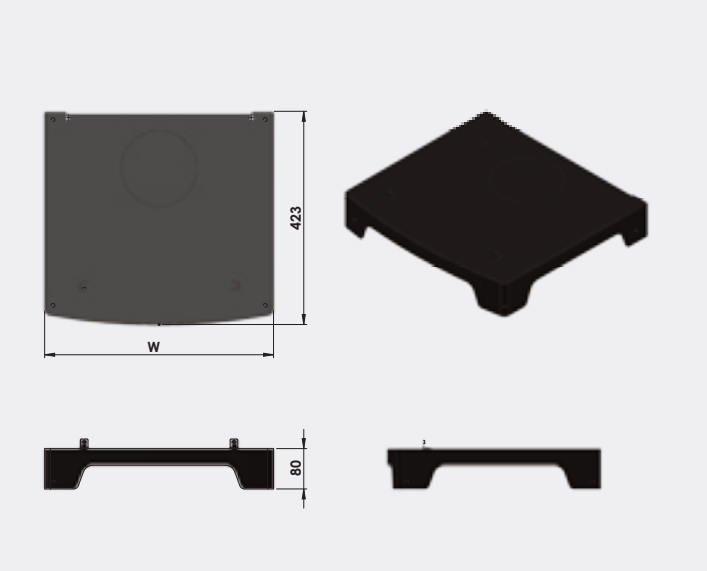

BPV5 Stand W=454mm **PV5W** W=554mm

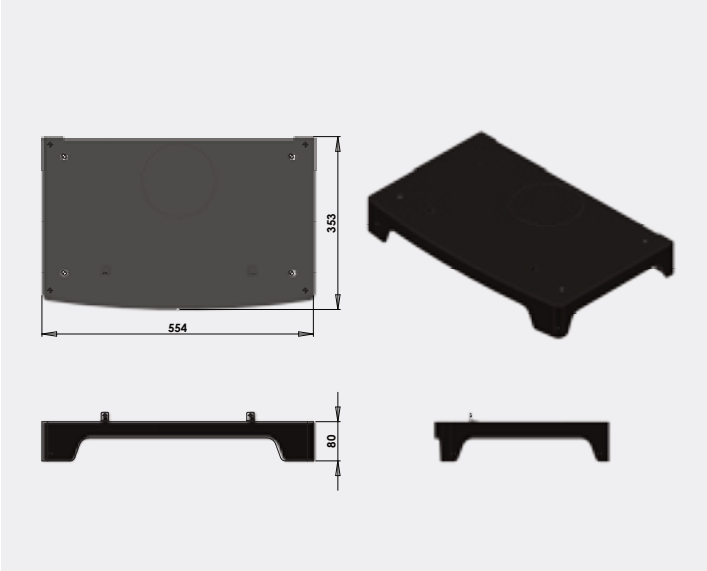

BPV5W Slimline Stand

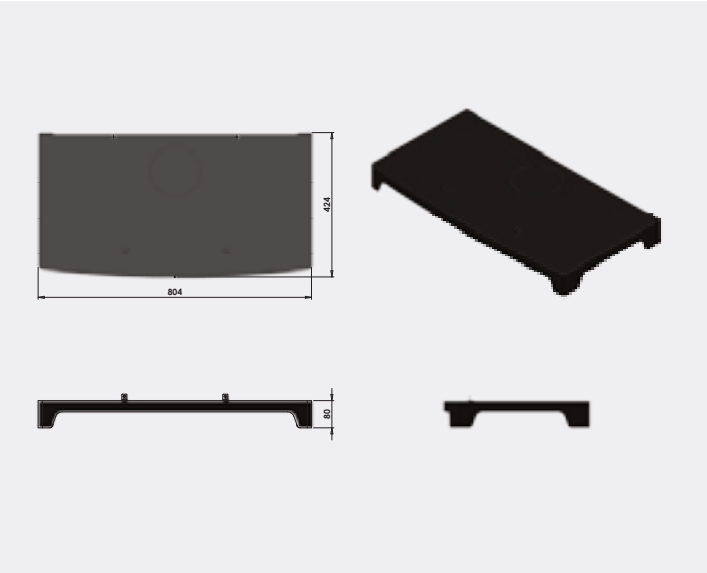

BPV8 Stand

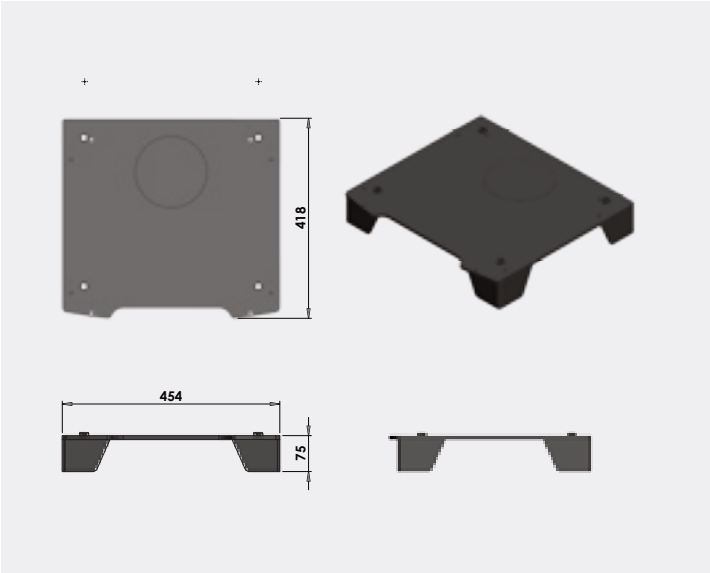

BPV5 Countryman Stand

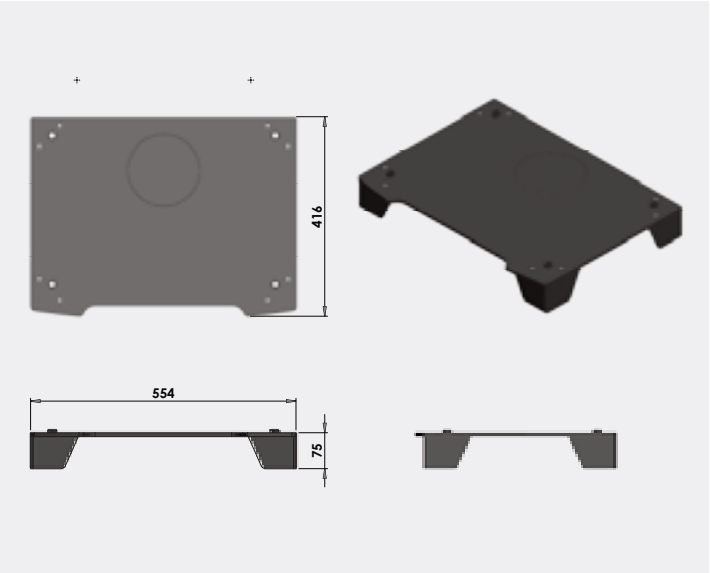

BPV5W Countryman Stand

Purevision™
LPV Dimensions

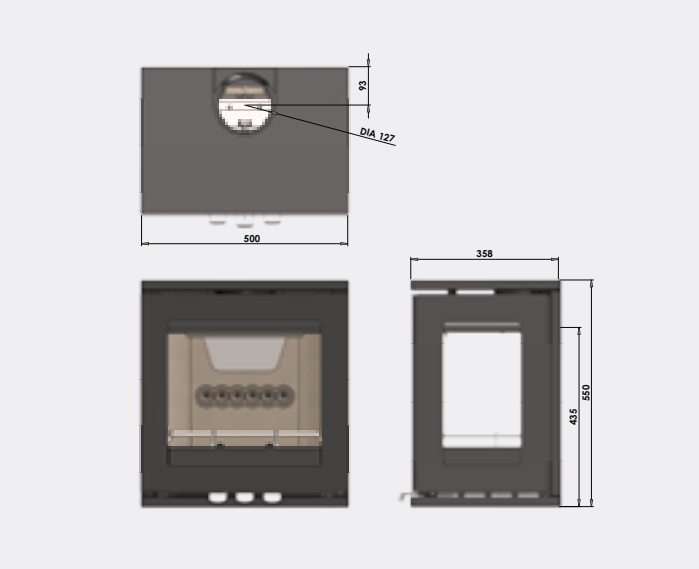

LPV5

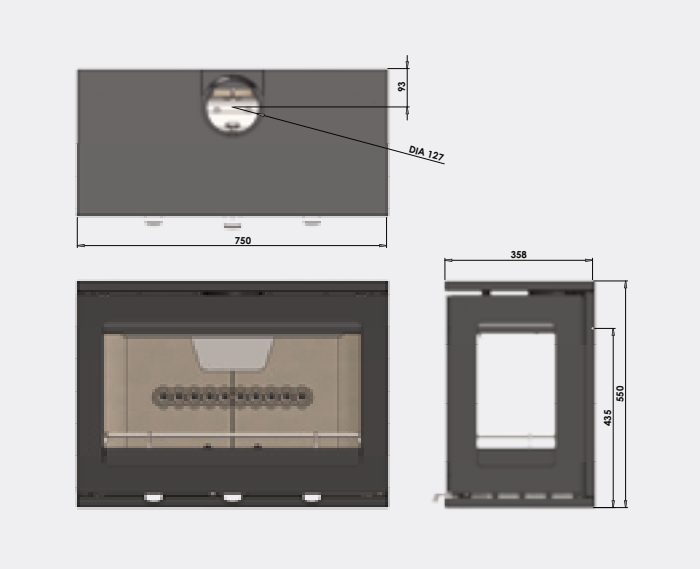

LPV8

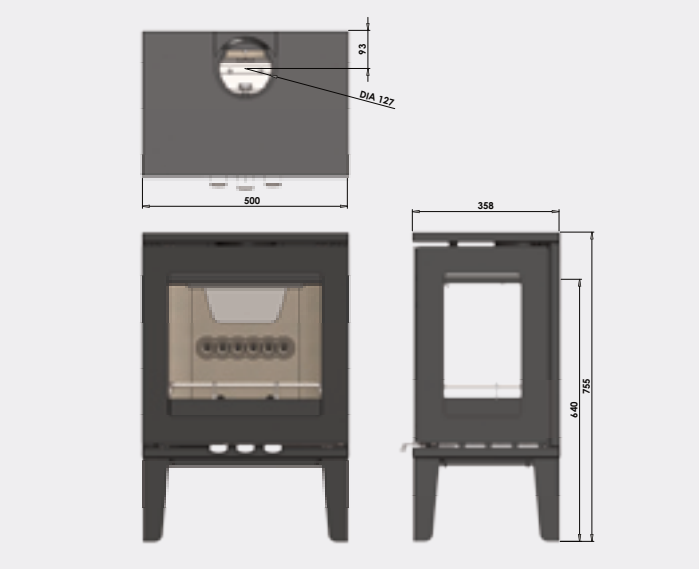

LPV5 on Leg Stand

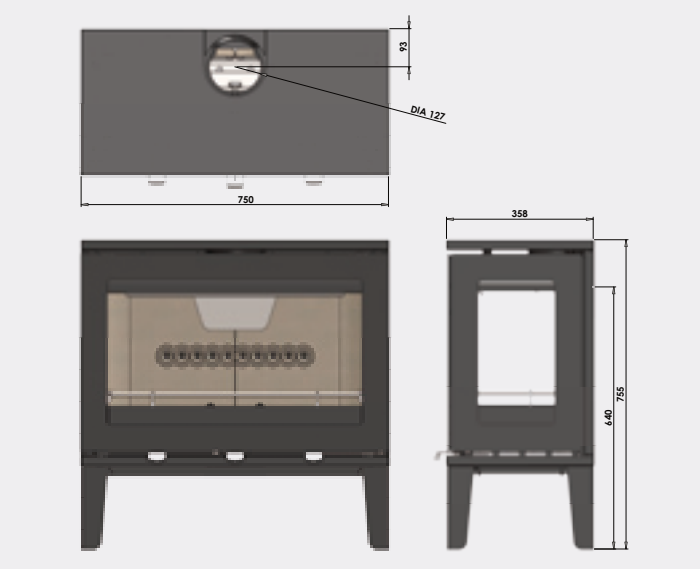

LPV8 on Leg Stand

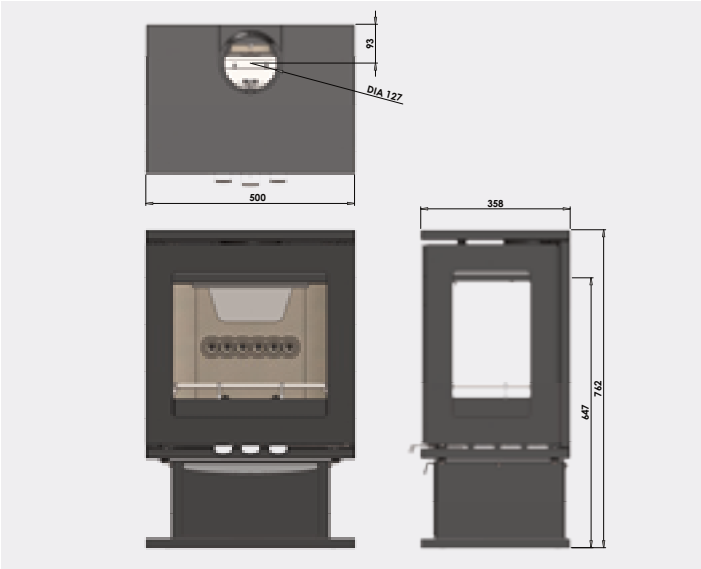

LPV5 on Pedestal Stand

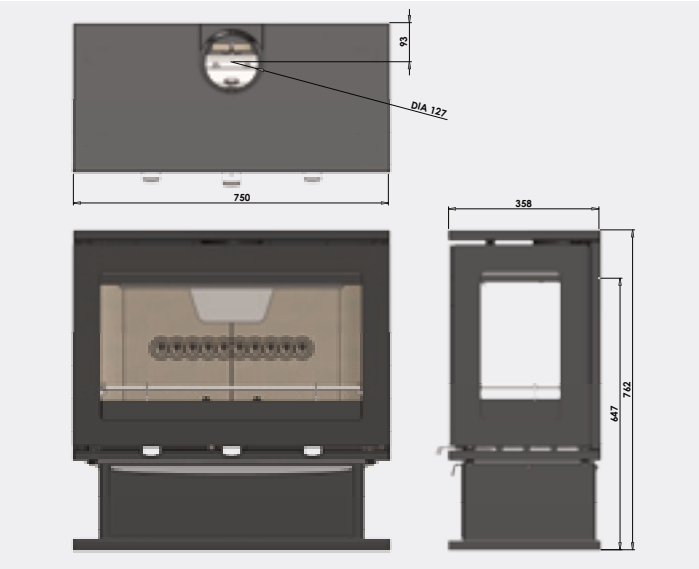

LPV8 on Pedestal Stand

LPV5 on Log Store

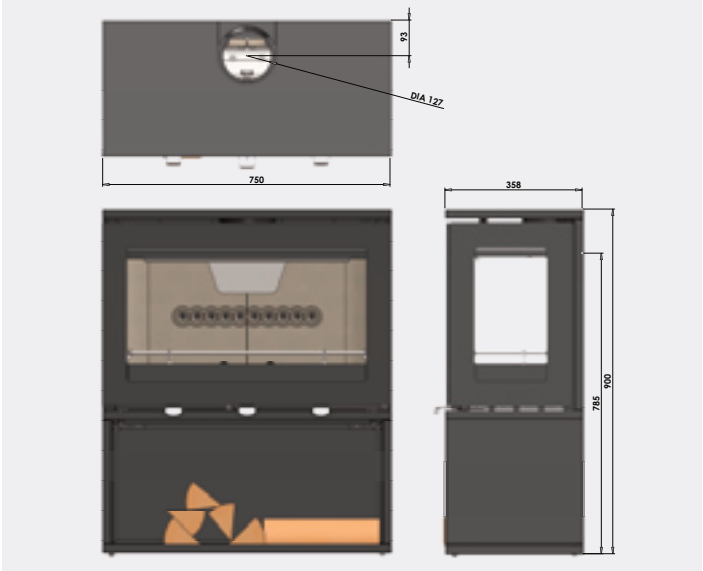

LPV8 on Log Store

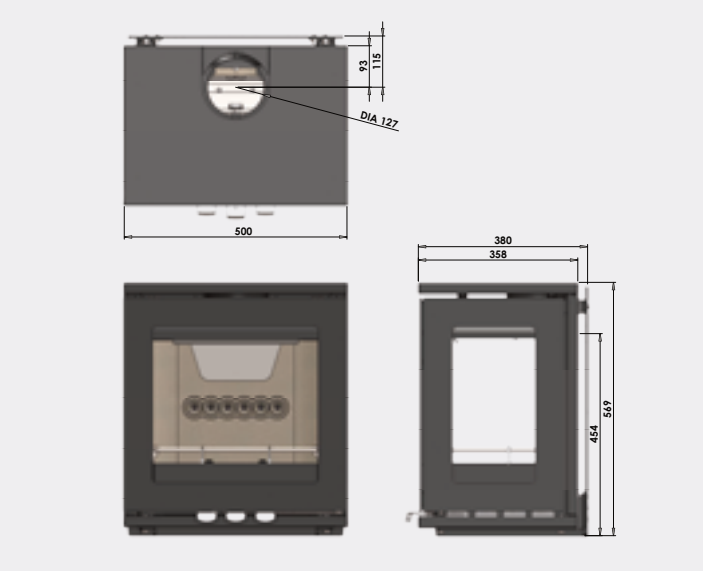

LPV5 on Wall Mounting Bracket

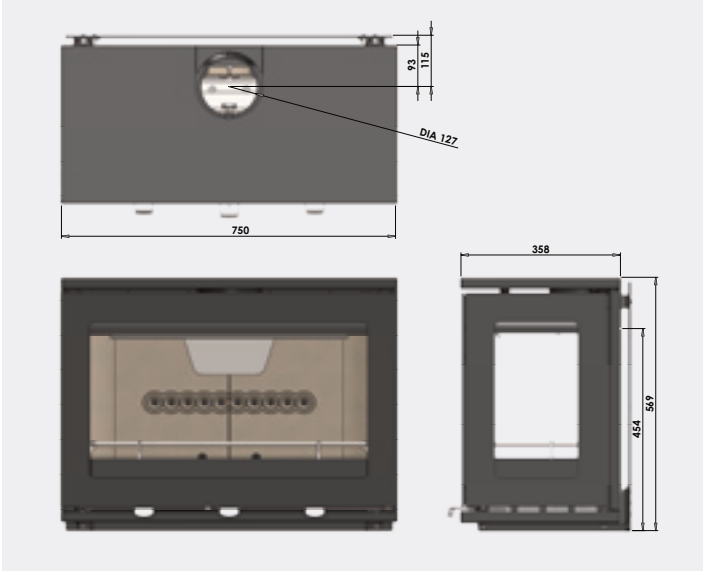

LPV8 on Wall Mounting Bracket

Purevision™
BPVR Dimensions

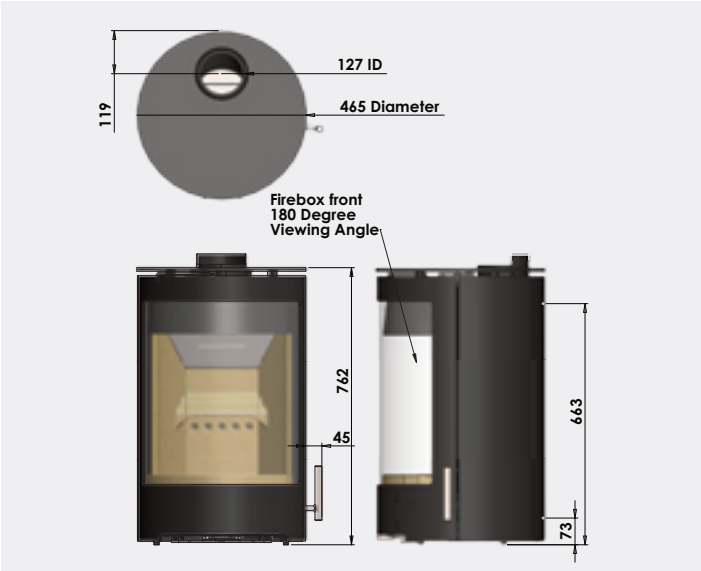

BPVR Cylinder

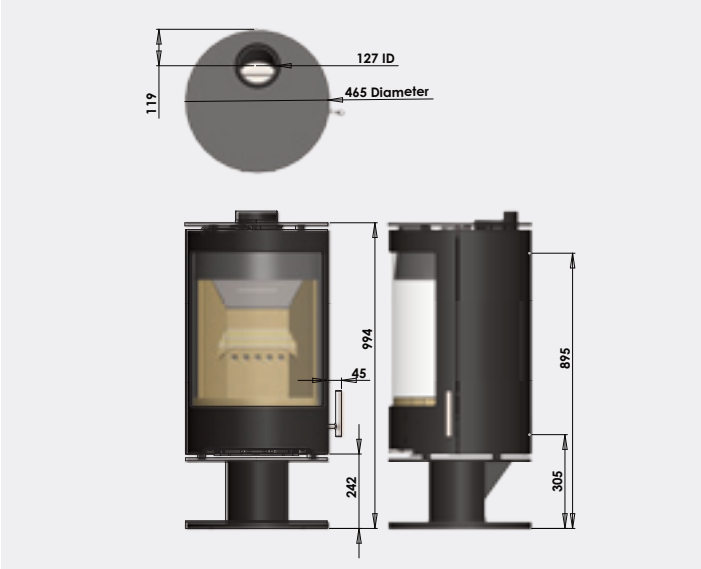

BPVR Cylinder on Low Pedestal Stand

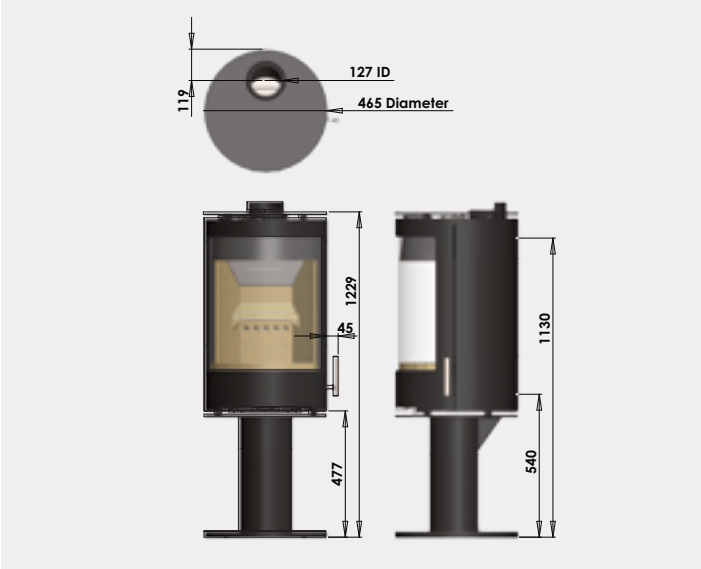

BPVR Cylinder on High Pedestal Stand

BPVR Cylinder on Low Log Store with Door

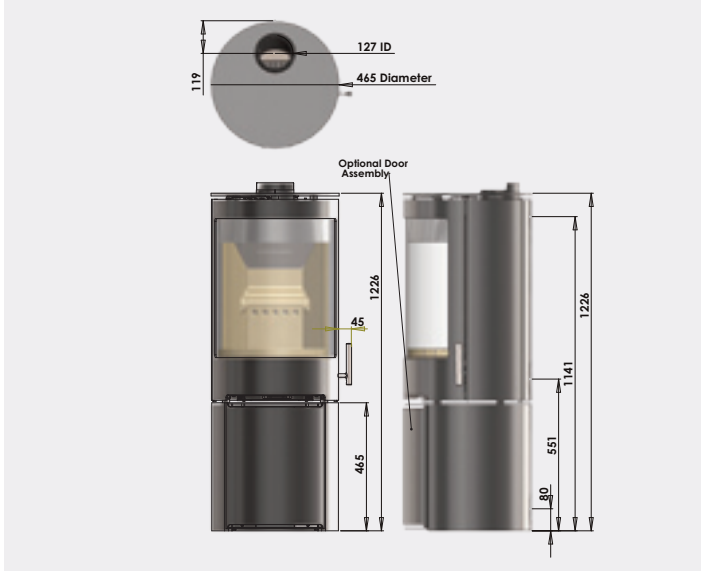

BPVR Cylinder on High Log Store with Door

Charlton & Jenrick™

Purevision™
– Classic Dimensions

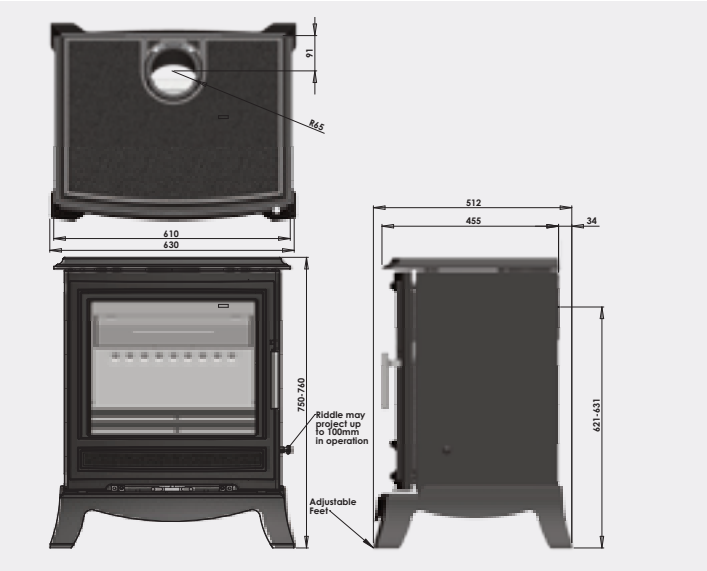

CPV5W

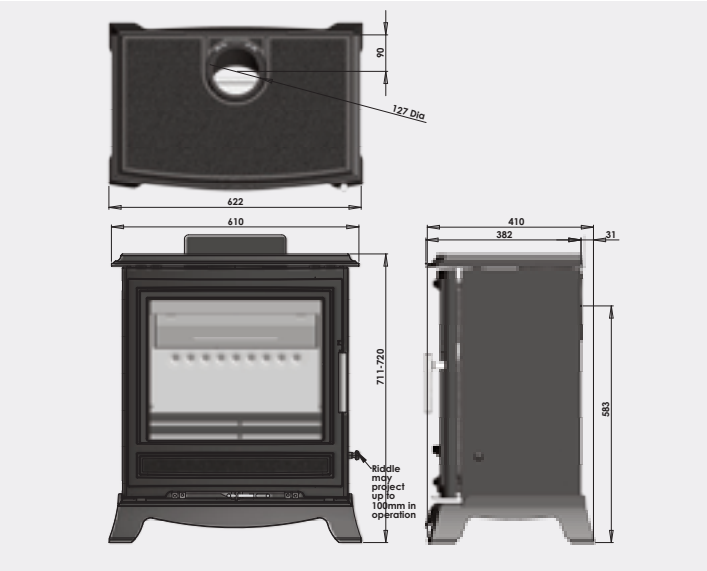

CPV5W Slimline

Purevision™
Installation Options

Limestone Surround

The most luxurious installation option, for either inset or freestanding stoves. More suited to a traditional interior, a limestone fireplace is sure to leave a lasting impression on all of your guests.

Inglenook

Create a cosy environment for snug interior spaces. Choose between a wide variety of wooden beams to create a traditional look that matches your home, or no wooden beam for a more modern look.

Freestanding

Perfect for open plan living environments, creating a central feature. Purevision stoves are easily capable of heating a large space, making your home perfect for entertaining.

Purevision™
Installation Gallery

Purevision™
Technical Design and Performance Details

Charlton & **Jenrick** invests in a substantial programme of continuous research and development from which the **Purevision** range of *clearSkies and SIA Ecodesign high-technology wood and multi-fuel burning stoves* have emerged. Giving the user high-efficiency performance and low emissions by incorporating a patented bespoke air profiling system and constructed with ultra-high specification materials and workmanship, the range has set new standards in multi-fuel home heating.

The team here at **Charlton** & **Jenrick** has developed no-compromise examples of the latest batch-fed combustion technology, meeting or exceeding the toughest emissions standards in Europe – amongst the highest in the world – whilst maintaining state-of-the-art thermal efficiencies of up to **82.2%**. This level of performance was long thought to be nearly impossible, but here it is in production, ready for you to enjoy the benefits whilst as far as possible protecting the environment. Long gone is the theory that you need a dedicated wood burner rather than a multi-fuel stove for the best possible combustion of wood. **Charlton** & **Jenrick** has once and for all solved that conundrum and turned it into a myth.

Not satisfied with merely achieving technical combustion excellence for environmental and efficiency benefits, **Charlton** & **Jenrick** has incorporated a huge number of advanced features into all its products for ultimate ease of installation, operation and use in the home environment.

The range comprises inset, freestanding, heat exchanger and wall-mounted models from 5kW nominal, through 5kW wide and panoramic models to the larger 8.5kW fireboxes for greater presence and flame picture impact. Externally the heavyweight doors have elegant lines and sophisticated curves to complement and enhance a vast range of interior design or fireplace choices. Exceptionally large glass panels maximise the view of the spectacular yet low emission wood flames. Freestanding models benefit from optional stands and log stores for convenience and ease of use. Pedestals are also available for the BPVR range to make operation and refuelling a pleasure. For installation flexibility, all freestanding models are compatible with superimposed hearths.

Inset models retain all the aesthetic qualities of the freestanding models and avoid compromise often seen with inset stoves. Every model uses patented tertiary air profiling technology, cast with exquisite detail into the

fine quality high-durability ceramic firebox liners. All stoves in the **Purevision** range have 5" flue connectors with top and rear options on freestanding models. A dedicated external air system can provide 100% combustion air from outside the property, in most cases effectively eliminating the need to install open air vents to the room. Automatic door latches and the broad air cooled solid stainless steel handle mean that refuelling actions are smooth and simple. A single laser-etched stainless steel air control lever automatically distributes combustion air to the firebox for the optimum burn. Inside, most components are removable without any tools for easy cleaning and servicing. The unique **Purevision** active baffle system is constructed from solid stainless steel and provides bespoke operational flexibility that no other UK stove manufacturer can currently offer.

To complete the whole package, a complementary solid stainless steel operating tool and stand are provided together with a branded tool roll and high-quality tools to make sure every detail is covered, leaving nothing to chance.

The entire range of **Purevision** stoves are *clearSkies Level 4 or 5 certified*, *2022 SIA Ecodesign ready verified* and listed, *Defra exempt* and listed, designed and manufactured under both *ISO 9001 quality* and *ISO 14001 Environmental management systems* and of course fully *CE and UKCA marked* to the latest UK and European standards – for total peace of mind.

Total Efficiency

Total efficiency is measured using well-established methods from harmonised EU standards EN 13240 and EN 13229. It is an indicator of the ability of a stove to turn fuel into heat for you. Although sometimes misrepresented, it is not in fact a measure of clean burning at all – always look at emissions data for that information. Many clean-burning stoves have a low total efficiency and many efficient stoves have high emissions.

	BPV5, BPV5i & BPV5 CMAN	BPV5 Slim, CMAN Slim	BPV5W, CPV5W, BPV5iW & BPV5W CMAN	BPV5WSlim & CP5WSlim	BPV8	BPVR	LPV5	LPV8
Purevision Efficiency (%)	80.2	79	82.2	77.1	76.7	76.8	79.6	76.5
clearSkies EU Efficiency Limit 2022 (%)	75	75	75	75	75	75	75	75

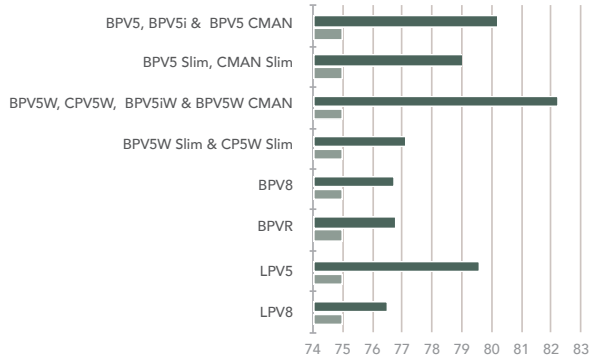

Defra Optical Density

This graph demonstrates the excellent clean-burning characteristics of the Purevision™ stove range during strictly controlled testing for Defra smokeless zone exemption for burning wood logs. Average optical density readings beat limits by up to 97% and average electrostatic precipitator particulate emissions exceed requirements by up to 75%.

	BPV5, BPV5i & BPV5 CMAN LOW	BPV5, BPV5i & BPV5 CMAN HIGH	BPV5 Slim, CMAN Slim LOW	BPV5 Slim, CMAN Slim HIGH	BPV5W, CPV5W, BPV5iW & BPV5W CMAN LOW	BPV5W, CPV5W, BPV5iW & BPV5W CMAN HIGH	BPV5W Slim & CP5W Slim LOW	BPV5W Slim & CP5W Slim HIGH	BPV8 LOW	BPV8 HIGH	BPVR LOW	BPVR HIGH	LPV5 LOW	LPV5 HIGH	LPV8 LOW	LPV8 HIGH
Optical Density (mins >0.2)	1.2	0.7	1.1	0.6	0.4	0.2	0.3	0.2	1.4	0.4	0.2	0	0.1	0.5	0	0.2
Optical Density Limit (mins >0.2)	6	6	6	6	6	6	6	6	6	6	6	6	6	6	6	6

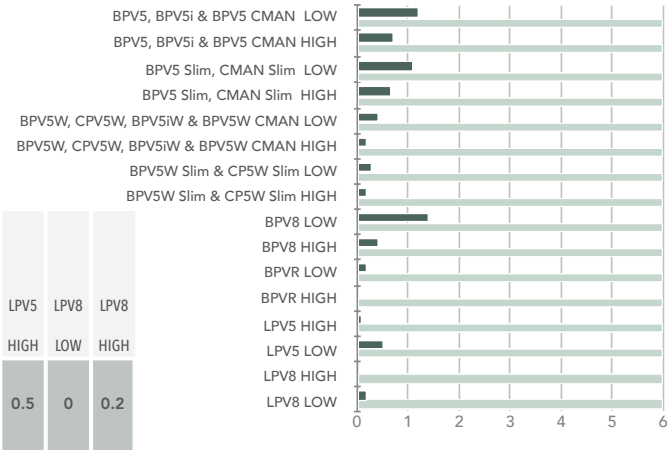

Defra PD6434 Particulate Emissions

This graph also demonstrates the excellent clean-burning characteristics of the Purevision™ stove range during strictly controlled testing for Defra smokeless zone exemption for burning wood logs. Average optical density readings beat limits by up to 97% and average electrostatic precipitator particulate emissions exceed requirements by up to 75%.

	BPV5, BPV5i & BPV5 CMAN LOW	BPV5, BPV5i & BPV5 CMAN HIGH	BPV5 Slim, CMAN Slim LOW	BPV5 Slim, CMAN Slim HIGH	BPV5W, CPV5W, BPV5iW & BPV5W CMAN LOW	BPV5W, CPV5W, BPV5iW & BPV5W CMAN HIGH	BPV5W Slim & CP5W Slim LOW	BPV5W Slim & CP5W Slim HIGH	BPV8 LOW	BPV8 HIGH	BPVR LOW	BPVR HIGH	LPV5 LOW	LPV5 HIGH	LPV8 LOW	LPV8 HIGH
Purevision PD6434 Particulates (g/h)	1.5	2.5	1.1	4.0	1.5	3.2	1.2	2.4	1.7	3.7	1.5	2.3	1.8	2.7	1.5	2
PD6434 Particulates Limit (g/h)	6.1	6.9	6.3	7.6	6.3	7.4	7.2	6.3	6.7	8.1	6.1	7.3	6.3	7.4	6.7	8.3

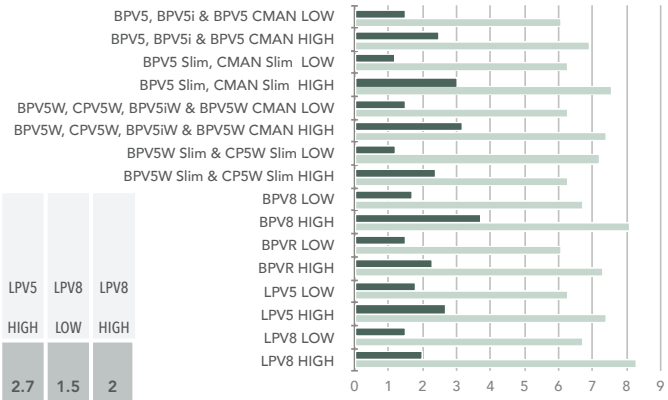

Ecodesign Particulate Emissions

Ecodesign particulate measurements are a comparative assessment of clean burning used extensively in Europe. Emissions from the Purevision™ range are up to 75% lower than the strictest EU requirements, including the clearSkies certification scheme.

	BPV5, BPV5i & BPV5 CMAN	BPV5 Slim, CMAN Slim	BPV5W, CPV5W, BPV5iW & BPV5W CMAN	BPV5W Slim & CP5W Slim	BPV8	BPVR	LPV5	LPV8
Purevision Particulates (Nmg/m³)	17	19	10	22	19	13	20	30
clearSkies EU Particulate Limit 2022 (Nmg/m³)	40	40	40	40	40	40	40	40

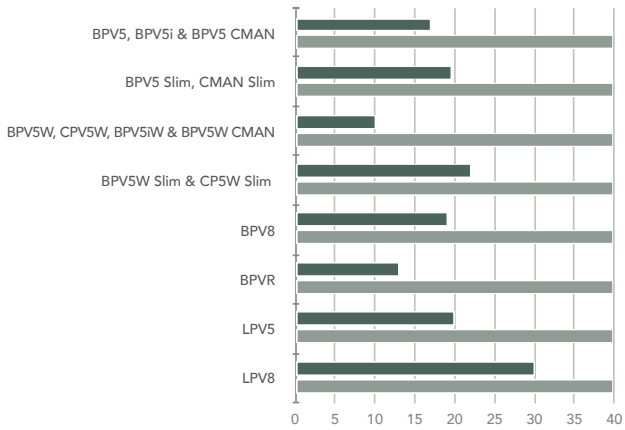

CO Emissions

CO emissions are being reduced and current EN 13240/13229 limits of 1% are being updated. Charlton & Jenrick aims for 0.1% or less when burning wood. The Purevision™ range already meets or exceeds the strictest EU requirements, including the clearSkies certification scheme.

	BPV5, BPV5i & BPV5 CMAN	BPV5 Slim, CMAN Slim	BPV5W, CPV5W, BPV5iW & BPV5W CMAN	BPV5W Slim & CP5W Slim	BPV8	BPVR	LPV5	LPV8
Purevision CO (%)	0.1	0.06	0.08	0.1	0.1	0.1	0.1	0.12
clearSkies EU CO Limit 2022 (%)	0.12	0.12	0.12	0.12	0.12	0.12	0.12	0.12

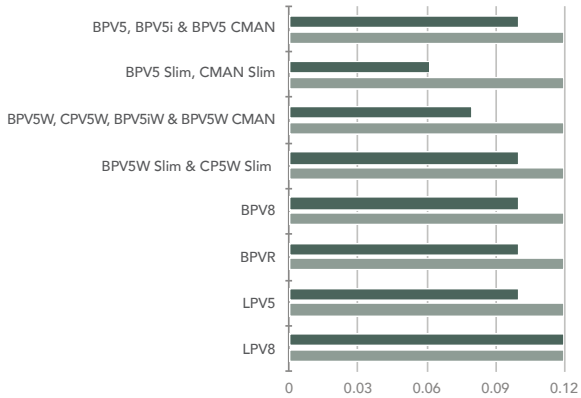

Organic Gaseous Carbon Emissions

Organic Gaseous Carbon forms part of emissions testing and is measured according to well-established methods. The Purevision™ range already meets or exceeds the strictest EU requirements, including the clearSkies certification scheme.

	BPV5, BPV5i & BPV5 CMAN	BPV5 Slim, CMAN Slim	BPV5W, CPV5W, BPV5iW & BPV5W CMAN	BPV5W Slim & CP5W Slim	BPV8	BPVR	LPV5	LPV8
Purevision OGC (Nmg/m³)	96	53	61	69	76	45	58	63
clearSkies EU OGC Limit 2022 (Nmg/m³)	120	120	120	120	120	120	120	120

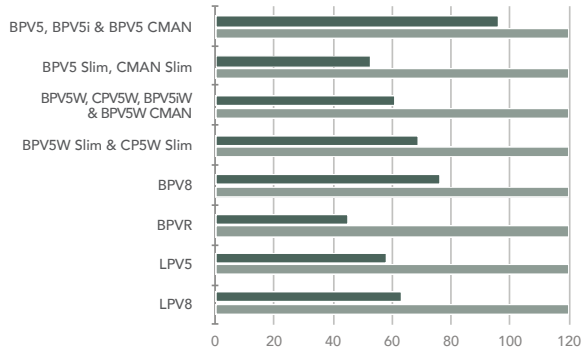

NOx Emissions

Emissions of nitric oxide and nitrogen dioxide (known collectively as NOx) are monitored as part of worldwide air quality standards and can be tested using Ecodesign methods. Purevision™ stoves NOx emissions far exceed the strictest EU requirements and the clearSkies certification scheme.

	BPV5, BPV5i & BPV5 CMAN	BPV5 Slim, CMAN Slim	BPV5W, CPV5W, BPV5iW & BPV5W CMAN	BPV5W Slim & CP5W Slim	BPV8	BPVR	LPV5	LPV8
Purevision NOx (Nmg/m³)	124	92	128	92	96	89	93	90
clearSkies EU NOx Limit (Nmg/m³)	200	200	200	200	200	200	200	200

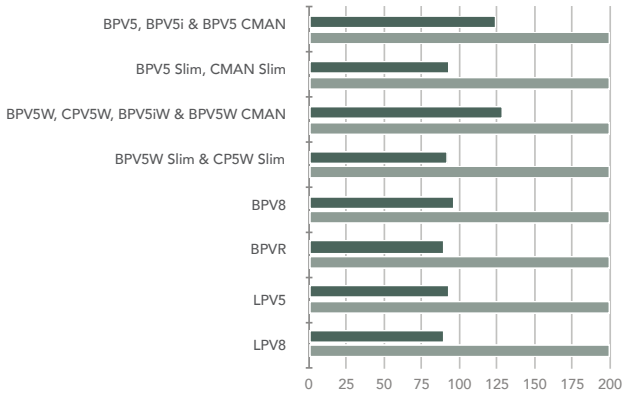

Charlton & Jenrick Company and Product Accreditations

Charlton & Jenrick have made a very substantial investment over the years in obtaining a wide range of accreditations and trade body memberships to ensure that we are consistently offering the best possible products and services to our customers. We not only manufacture appliances but we also put in huge behind-the-scenes efforts to ensure that we input to and keep abreast of impending legislation, standards, product performance and environmental requirements. Currently we subscribe and contribute to the following accreditations:

The UKCA (UK Conformity Assessed) mark is the new UK product mark that replaced the CE mark for products being placed on the market in Great Britain (England, Wales and Scotland). It covers most products that previously required the CE mark. All our fires comply to this new mark.

HHIC, the Heating and Hot Water Information Council is a trade body representing the UK gas fire industry. As part of the Energy and Utilities Alliance, within the HHIC we have an input into EU and UK standards committees, communicate with Government departments and keep abreast of serious issues affecting the gas fire industry.

SIA, the Stove Industry Association is the UK trade body for the solid fuel stove industry. C&J are members of the Executive Committee and currently chair the Technical Committee enabling input into UK and EU standards committees and lines of communication into Government departments and keeping up to date on a wide range of issues affecting the industry.

Gas Safe Register is the mandatory national competent persons scheme to allow work on gas fittings and appliances in customers' homes. Our service and most of the sales team have completed the regular training courses and sit the regular exams to ensure our customers have the best support and service.

@cJfires

www.facebook.com/cJfires

www.charltonandjenrick.co.uk

ISO 9001 is the internationally recognised standard for Quality Management Systems which in our case includes the activity of product design and development as well as production, sale and support functions. Annual independent audits and certification ensure continued compliance in producing consistent quality products.

ISO 14001 is the internationally recognised standard for Environmental Management Systems. Once again this independently audited and certified system makes sure that we are regularly monitoring and reviewing the impact of the business and its products to ensure we minimise negative impacts and promote best practice.

clearSkies is a certification mark for Emissions and Energy Performance of domestic wood & solid fuel stoves and fireplaces. clearSkies ratings, namely the certification levels, will show appliances that meet defined emissions and efficiency thresholds that exceed the minimum requirements set by the ecodesign regulation.

CE marking of products is mandatory for electric, gas, and wood-burning fires and stoves in Europe. We always invest in independent testing and certification to ensure our products meet all necessary requirements for the regions we operate in.

Please note: Our policy is one of constant development and improvement. We therefore reserve the right to revise the specification and design of our products without formal notice. This brochure is presented as a guide to aid in your decision and does not replace the need for technical assessment by your dealer. While the utmost care was taken in the preparation of this brochure, it is not intended to replace the installation manual which provides more detailed information. Photography is for illustration purposes only and does not replace the need to see the product in a showroom. We accept no liability for any loss or damage arising either directly or indirectly from the use of this brochure. All designs in this brochure are design or copyright registered. Charlton & Jenrick, without exception, will take action against any infringements of its designs.

The **Charlton & Jenrick** way

Since being established in 1986, we have grown and now sell products across all fuel types.

Regardless of whether you need a gas, wood-burning, solid-fuel, or electric appliance we have a product to fit your needs.

See our full range at

www.charltonandjenrick.co.uk

Please scan the QR code to visit now

See our products live

We believe you need to see one of our products with your own eyes before purchasing, to fully understand how it fits into your home.

This is why we sell through a network of over 400 independent fireplace showrooms right across the UK.

Charlton & Jenrick

See our other Solid-Fuel Ranges

Fireline™ Statement stoves for every home

GO ECO
STOVE RANGE

GO ECO
BAKECHEF
COOKING STOVE

GO ECO
ADVENTURER5
GLAMPING STOVE

A range of glamping, cooking, outdoor and conventional stoves for home and glamping environments.

Notes

Charlton & Jenrick LTD

Charlton & Jenrick Ltd, Unit D,
Stafford Park 2, Telford, Shropshire
TF3 3AR
Tel: 01952 200444
e-mail: sales@charltonandjenrick.co.uk
charltonandjenrick.co.uk

CONNECT WITH US:

@cJfires
charlton-&-jenrick-ltd
cJfires
charltonandjenrick
1CJGroup
cJfires

Design and production by sixty CS 01384 838540. J/1103
Issue PV2