INFINITY

Instruction for user, Installation & Servicing

890 HD

Keep this booklet for service log and future reference

IMPORTANT

This appliance is guaranteed for 12 months subject to conditions. The 5 year extended parts warranty will only be valid if the annual service recommended in this manual has been completed and appliance has been registered online.

Video guides found at http://www.charltonandjenrick.co.uk/infinity-set-up-guides/

Contents

EXTENDED FIVE YEAR PARTS WARRANTY 1
Benchmark Scheme 2
Introduction 3
Consumer Protection Information 3
Lighting the Appliance & General Operation Of Control 5
Auto (Thermostatic) Control 7
Menu features 8
Changing The Handset Batteries. 8
Cleaning the 890 HD Appliance 9
Fuel Bed Layout 10
WALNUT FUEL BED LAYOUT 12
SILVER BIRCH FUEL BED LAYOUT 16
Technical Specification 22
Siting the Appliance 23
Installation of the Appliance 31
Commissioning the Appliance 38
Annual Service Requirement. 42
Fault Finding Charts 44
Maintenance 48
Short Spares List 52
Your Fire Years Parts Extended Warranty 53
Four Year Service Log Details 54
GAS FIRE COMMISSIONING CHECKLIST 55
Register Your 12 Month Warranty with Us Today 56

EXTENDED FIVE YEAR PARTS WARRANTY

In order to validate your extended 5 years parts warranty please read the Benchmark Scheme and ensure your installer has filled in the appropriate checklist.

Benchmark Scheme

Charlton and Jenrick Ltd is a licensed member of the Benchmark Scheme which aims to improve the standards of installation and commissioning of domestic heating and hot water systems in the UK and to encourage regular servicing to optimise safety, efficiency and performance. Benchmark is managed and promoted by the Heating and Hotwater Industry Council. For more information and the full code of practice please visit www.centralheating.co.uk

Please ensure that the installer has fully completed the Benchmark Checklist on the inside back pages of the installation instructions supplied with the product and that you have signed it to say that you have received a full and clear explanation of its operation. The installer is legally required to complete a commissioning checklist as a means of complying with the appropriate Building Regulations (England and Wales).

All installations must be notified to Local Area Building Control either directly or through a Competent Persons Scheme. A Building Regulations Compliance Certificate will then be issued to the customer who should, on receipt, write the Notification Number on the Benchmark Checklist.

This product should be serviced regularly to optimize its safety, efficiency and performance. The service engineer should complete the relevant Service Record on the Benchmark Checklist after each service.

The Benchmark Checklist will be required in the event of any warranty.

It is a requirement that the gas fire is installed and commissioned to the manufacturer's instructions and the data fields on the commissioning checklist completed in full.

To instigate the guarantee, the gas fire needs to be registered with the manufacturer within one month of the installation.

To maintain the guarantee, it is essential that the gas fire is serviced annually by a Gas Safe registered engineer. The service details should be recorded on the Benchmark Service Interval Record and left with the householder.

Introduction

The 890 HD has been designed and tested to the requirements of EN 613 and is suitable for use in Great Britain & Republic of Ireland.

890 HD incorporates a single gas valve which selects ignition pilot, with variable setting between low and high setting and is operated via remote control hand device or optional smart app device. This system is powered by mains electricity via pre-wired transformer plus supply cord. Alternative power supply is available for users during mains interruptions.

The 890 HD incorporates a safety device in form of an Oxygen Depletion System, which constantly monitors the oxygen in the room and will cause the fire to switch off if the oxygen level reduces, for instance due to insufficient ventilation or a blocked flue.

Consumer Protection Information

As manufacturers and suppliers of heating products, we take every care to ensure that the design and construction has to meet the general safety requirements when properly used and installed. To this end, our products are thoroughly tested and examined before despatch.

Any alteration that is not approved by the manufacturer could invalidate the approval of the appliance, operation of the warranty and could affect your statutory rights.

This appliance could contain some materials that could be interpreted as being injurious to health. It is the users / installers responsibility to wear protective clothing when handling the following materials. Artificial fuel, mineral wool, insulation material, refractory/ceramic fibres and glass yarn. May be harmful if inhaled, may be irritating to skin, eye, nose and throat.

When disposing refractory / ceramic materials to keep dust to a minimum these materials should be securely wrapped in polythene and clearly labelled “RCF waste”. These materials are not classified as hazardous waste and should be disposed of at a site licensed for disposal of industrial waste.

Important Information

The appliance is for use on Natural Gas (G20 @ 20mbar) or LPG (G31 @ 37mbar)

The Chimney or flue (unless new or previously used with a gas appliance) should be swept before installation if been used for solid fuel.

In Great Britain, the appliance must be installed by a competent person whose name appears on the gas safe register. All Gas Safe engineers should possess an ID carrying the logo below.

In IE (Ireland), the appliance must be installed by a competent person and installed in accordance with the current edition I.S 813 Domestic Installation.

The glass front of this appliance acts as a dress guard, conforming to BS 1945 (1997) however a fireguard to BS6539 (1997) must be used to protect young children, the elderly or infirm.

The Appliance must not be used with the glass safety screen removed or if it is damaged or cracked.

During initial "burn off", an odour may be evident during the first few hours of use. This is due to the surface coating on the metal work "burning off". The odour produced is harmless and will disappear after a short period of time.

During the normal operation of the fire some black staining may appear on some parts of the fuel bed. This is quite normal. However, if excessive black staining occurs it may be due to the fuel bed shapes laid incorrectly. This should be checked prior to contacting a service engineer.

Care must be taken to prevent any damage being caused to surrounding soft furnishing or decoration. Many embossed vinyl coverings may become discoloured if placed too close to the appliance. It is suggested that a sample of the proposed wall covering should be placed above the appliance at its hottest point first. The appliance should then be run on high rate over a couple of days

It is advised that this appliance is serviced annually as recommended by Gas Safe. This is more likely to provide trouble-free operation and is a requirement of the extended warranty.

In GB (Great Britain) the fire does not normally require purpose built ventilation, but if for any special reason purpose built ventilation is provided it should be checked periodically to ensure freedom from obstructions.

In IE (Ireland) permanent ventilation must comply with the current edition of IS813.

Lighting the Appliance & General Operation Of Control

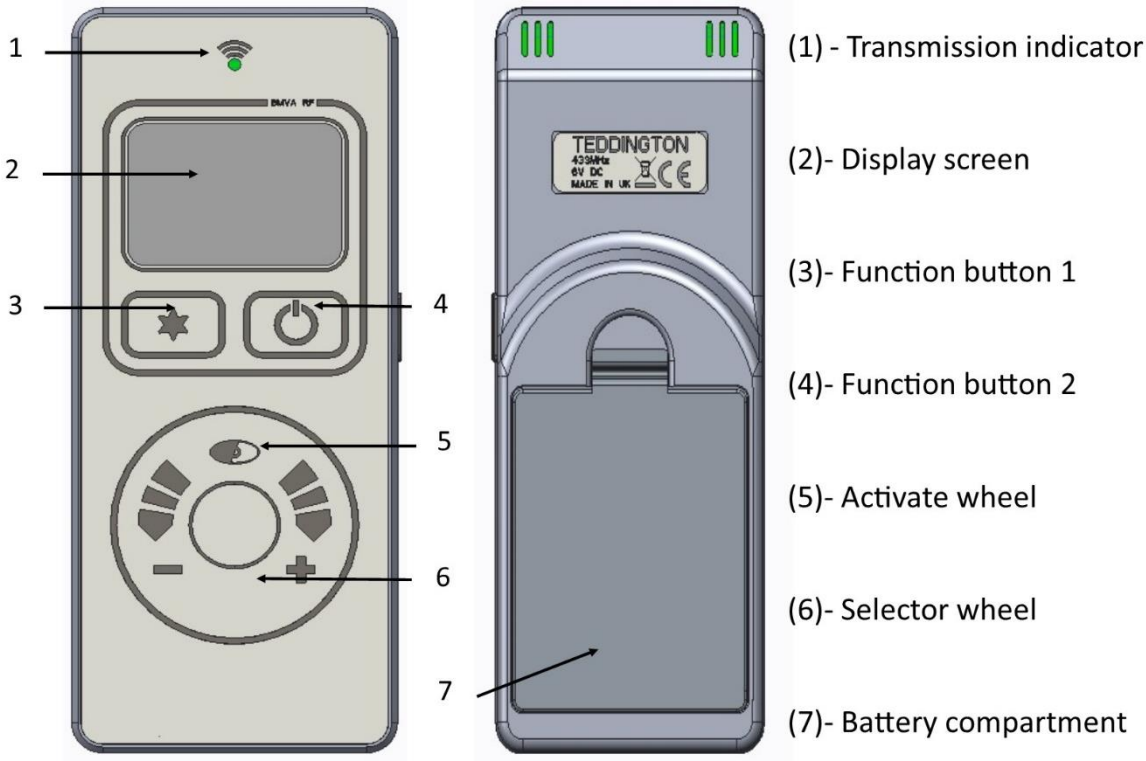

Handset set up video

http://www.charltonandjenrick.co.uk/handsetguide/

Display overview

Press to awaken the handset from its dormant sleep mode at any time. Fig 1 shows the display neutral, ready to turn on.

Turn on (start up).

Pressing and holding displays an "UNLOCK" graphic Fig 2 prompting the button to be pressed simultaneously. Whilst both & are pressed a progress bar Fig 3 will complete. If either button is released before the progress bar has completed the operation will cancel. Once the progress bar has completed the handset will display the status of the fire (priming – ignition – pilot – main burner) finishing at the fire "on" display screen Fig 4.

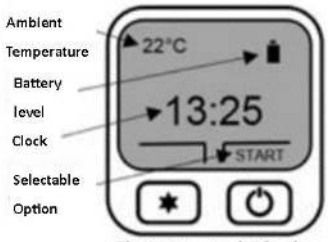

Fig 1 Neutral Display

Fig 2 Unlock graphic

Fig 3 Progress bar

Flame height adjustment

Once the fire has been started (after a period of 10 minutes) the flame height can be decreased by moving your finger clock wise or decreased moving your finger anti-clock wise using the selector wheel. Once the desired flame level is set, remove your finger from the selector wheel to transmit your selection to the receiver. Six flame levels are selectable. Press whilst the display is active to display the current flame level.

Turn off (shut down)

To turn the appliance off, press and hold down until the progress bar has completed. If the is released before the progress bar has completed the operation will cancel.

Mode select

With the fire running on manual operation you can access three further "modes". Press for "mode". Use the selection wheel to cycle through the three options, "Auto", "Sleep" and "Light". Press to select "Auto" or "Sleep"

Sleep:- Use the selector wheel to choose from the available time range of 5 minutes to 1 hour 30 minutes. Once the desired countdown time has expired the appliance will turn off. By pressing the button during the countdown will cancel the countdown timer if required.

Light:- Use the selector wheel and scroll to the "light" option. An appliance back light can be turned on or off by pressing the button.

Note: The handset contains a sensitive temperature measurement device. To achieve the best thermostatic efficiency do not place the handset near the heat source, avoid covering, direct sunlight or near a draft or open window etc. Place the handset at a midpoint in the room or area being heated. Allow 5-10 minutes for the handset to stabilize if subjected to extremes of temperature.

Auto (Thermostatic) Control

Press to awaken the handset from its dormant sleep mode at any time.

Selecting auto control

The "auto" function can only be selected once the appliances has been started and initiated into "manual" mode. Once in manual mode, press and release the button to enter the "mode" options. Auto is the first option, press to enter auto mode.

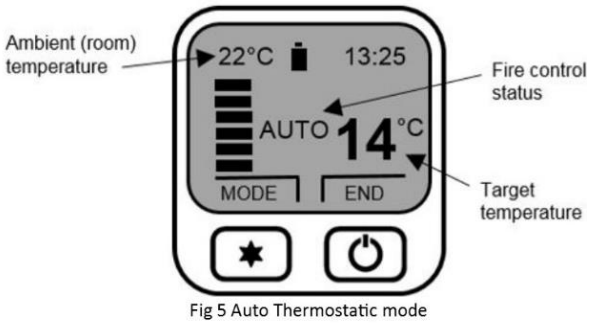

Fig 5 Auto Thermostatic mode

Adjusting target temperature

Use the selection wheel to increase or decrease the temperature to the desired level, release your finger from the wheel to transmit the target temperature (See Fig 5) to the receiver. The "auto" function will now modulate the flame height to achieve your target temperature. The selectable temperature range is 1 degree C to 29 degree C.

Cancelling auto function

Press to "end" and cancel the "auto" control. The handset will return to manual control.

Menu features

The menu can be accessed by pressing and holding the ⊛ button (approx. 5 seconds) until the menu graphic completes (see fig 6). Use the selector wheel to highlight one of the available options. Press ⏻ to enter the required option.

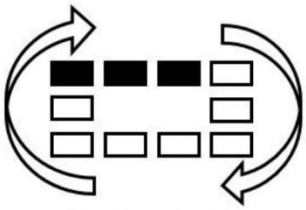

Fig 6 Menu Graphic

Set clock

The handset clock has a dedicated 24 hour display. Use the selector wheel to firstly set the hours. Press ⊛ to change to minutes select. Use the selector wheel to change the minutes. Press the ⊛ button to alternate hours and minutes to make any other alterations. Finally, press the ⏻ button to save the clock setting.

Display

Temperature display units-use selector wheel to select either Celsius (degree C) or Fahrenheit (degree F). Press the ⏻ button to save selection.

Gas fire (pair code)

The device screen displays the current operating channel of the handset. To delete the channel press ⊛ & ⏻ simultaneously or ⏻ to return to the menu option.

Reset

To restore the handset back to its original factory setting select "reset" from the menu options. Press - & - simultaneously to complete the reset command – to return to the menu options.

Changing The Handset Batteries.

The handset operates from four AAA 1.5V batteries. New alkaline batteries are recommended. Do not mix new and old batteries. When inserting the batteries, observe and position batteries according to the battery compartment graphics (see Fig 7). When the batteries are inserted the handset will attempt to pair.

Fig 7 Battery compartment

Cleaning the 890 HD Appliance

Ensure the appliance is cold before proceeding.

The outer metal work frame should be cleaned using a damp cloth.

To clean the glass panel, remove the four M4 nuts fixing the glass clamp to the glass panel. (See Fig 8). With the nuts removed, pull the glass clamp clear of the four studs. Finally lift the glass panel out of the bottom glass fixing.

4 off glass fixing nuts

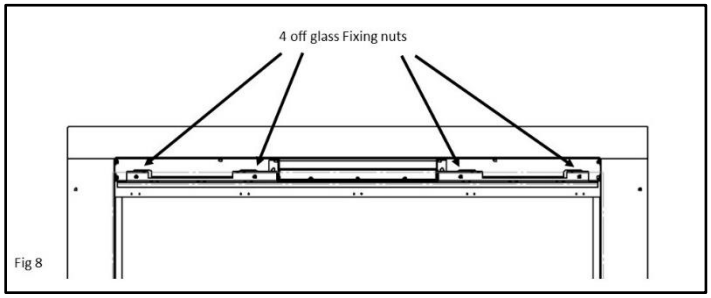

Fig 8

Using a damp cloth and warm soapy water will remove a majority of stains. For more substantial marking we recommend the use of ceramic hob cleaner. These are available from all leading super markets. The brands of hob cleaner we have tested and found suitable are "Hob brite" & "Bar Keepers Friend". Ensure the glass is dry and re-assemble.

Note- Never operate the appliance when the glass panel is removed or broken. The glass may discolour quickly when first installed, and it should be cleaned. This is due to the burning of the refractory fuel bed shapes.

To Clean the Pilot assembly. Remove the four M4 nuts and glass clamp (See Fig 8). Carefully lift the glass panel from within the bottom location. Remove the log and bark chip shapes. Lift out the air tray assembly from within the burner shelf.

The pilot is located on the right hand side of the appliance, remove any debris in or around the pilot head and the aeration hole. This can be achieved using the nozzle of a vacuum cleaner. It is advisable not to blow the debris within the pilot head or aeration hole as this may cause more of a restriction and not rectify the problem.

Note-Take care when cleaning in this area so as not to damage the pilot assembly.

Cleaning the fuel bed shapes. (Please refer to customer protection information on page 2 of this booklet before cleaning or replacing any refractory materials).

The fuel bed components are delicate and they should be handled with great care. They can be brushed very gently with a soft brush to remove dust or any deposits. A vacuum cleaner may only be used after the loose components and moulded shapes have been removed from the 890 HD fire box.

It is important that all fuel bed shapes are positioned as shown in these instructions.

Fuel Bed Layout

Fuel bed lay out video can been found at:
http://www.charltonandjenrick.co.uk/890guide/

Firstly, place the air tray within the fire box shelf as shown, **making sure both pieces of the air tray are sitting flat and met in the middle**.

The Log & bark shapes must be positioned in accordance to the following instructions to give the correct flame picture & reduce the risk of glass staining.

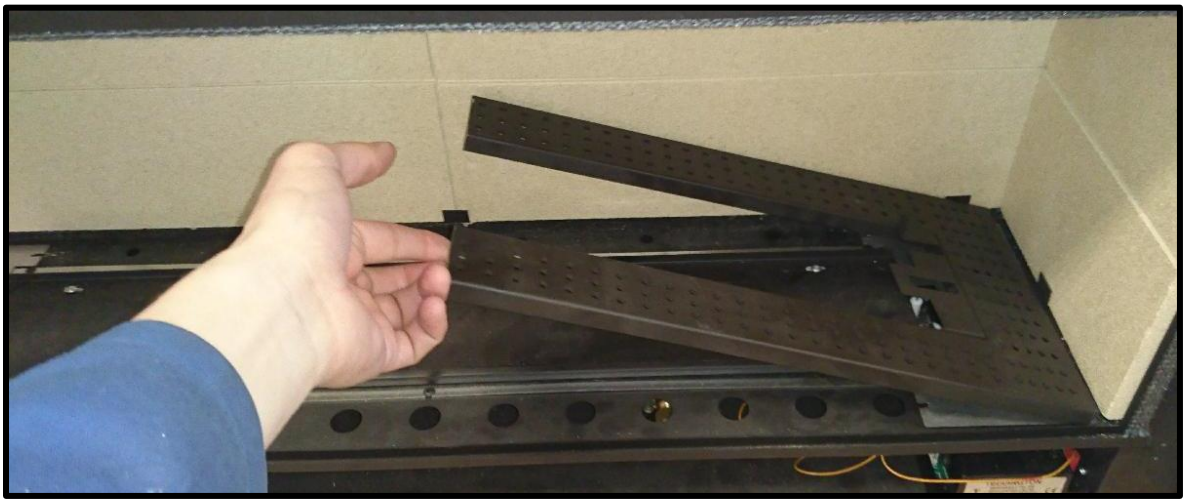

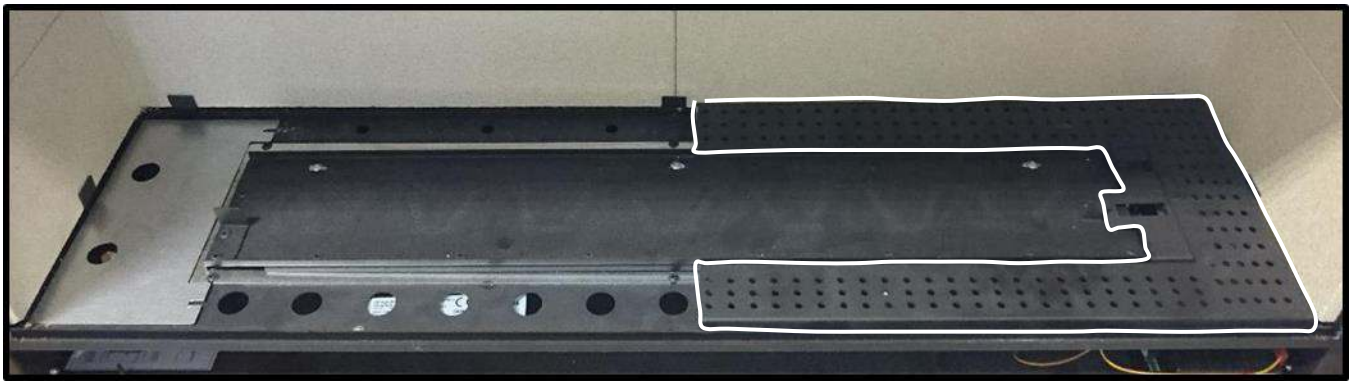

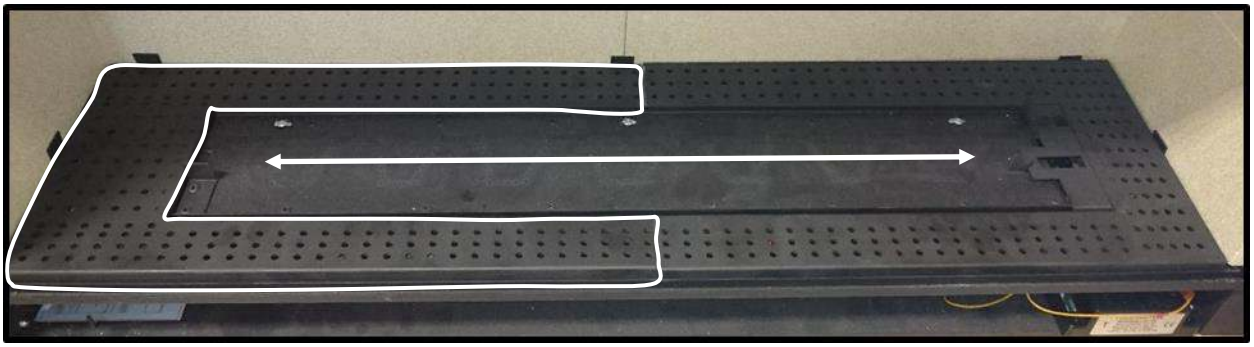

Push both sides of the air tray against the side of the fire box leaving a small gap in-between the two halves of the air tray as shown below

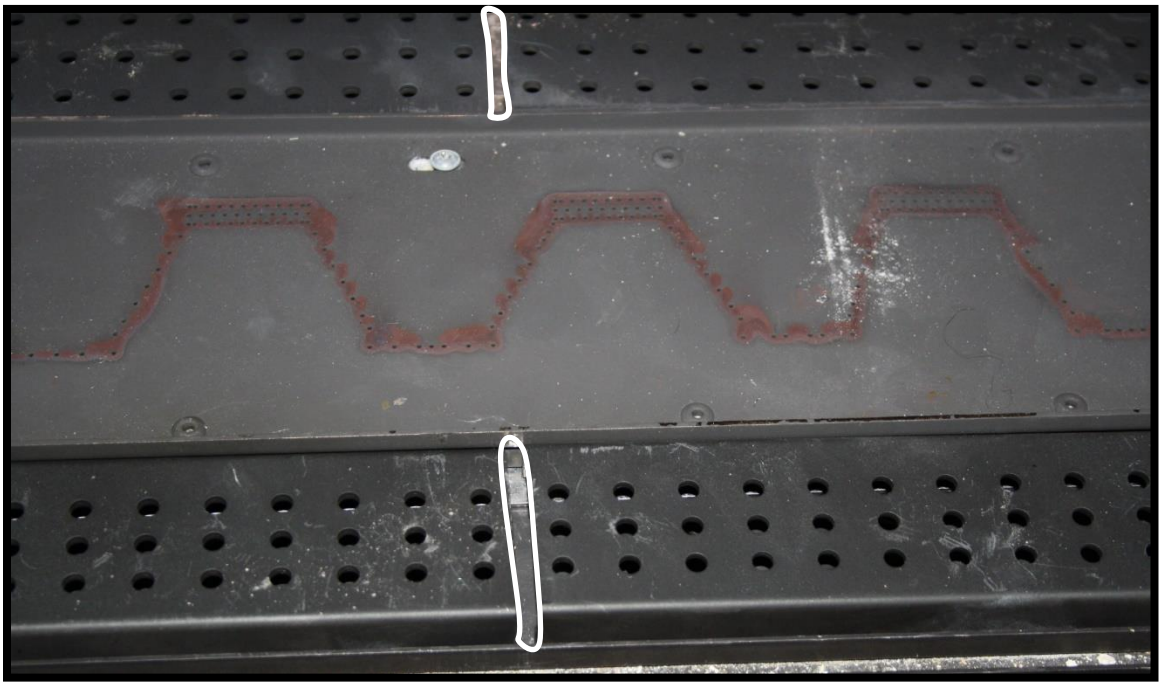

WALNUT FUEL BED LAYOUT

Place a single layer of the forge embers across the burner spreading them out evenly

Note: by applying more than one layer may result in excessive sooting and produce a poor flame picture

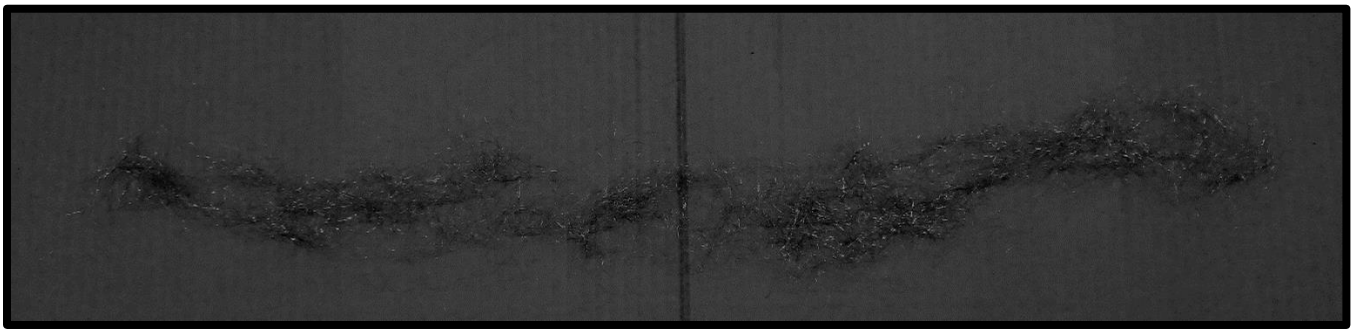

Stretch out the Embaglow fibers out so that they form a loose and thin network then lay the network across the back of the layer of forge embers, try and ensure that there is no clumps of the fibers to allow the gas to flow through. Please note that these fibers are made of metal and must be kept away from the pilot so it does not short and prevent the pilot from lighting

NATURAL GAS ONLY

Lay a single layer of the bark chippings across the front edge of the air tray as shown in the image above

These shapes that are placed at the back of the firebox and the rear surface of the log is a flat edge which needs to be placed against the rear liner.

Rear log shape with flat surface on the rear

Normal log which is rounded

Place the three rear shapes as shown touching the rear liner.

Place the first log as shown

Place the next log as shown

Place the next log as shown

Place the next log as shown

Place the next log as shown

Place the next log as shown

Place the final log as shown

SILVER BIRCH FUEL BED LAYOUT

Firstly, place the air tray within the fire box shelf as shown, **making sure both pieces of the air tray are sitting flat and met in the middle**.

The Log & bark shapes must be positioned in accordance to the following instructions to give the correct flame picture & reduce the risk of glass staining.

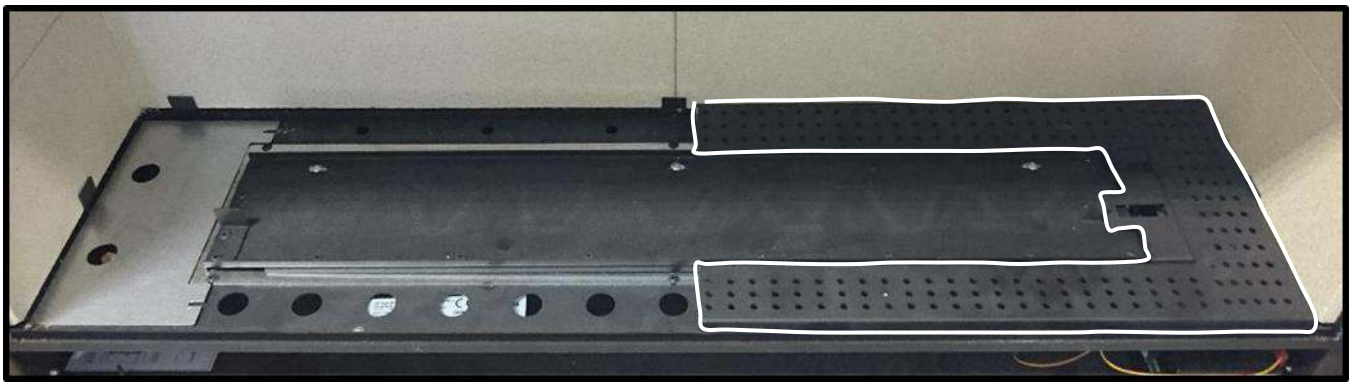

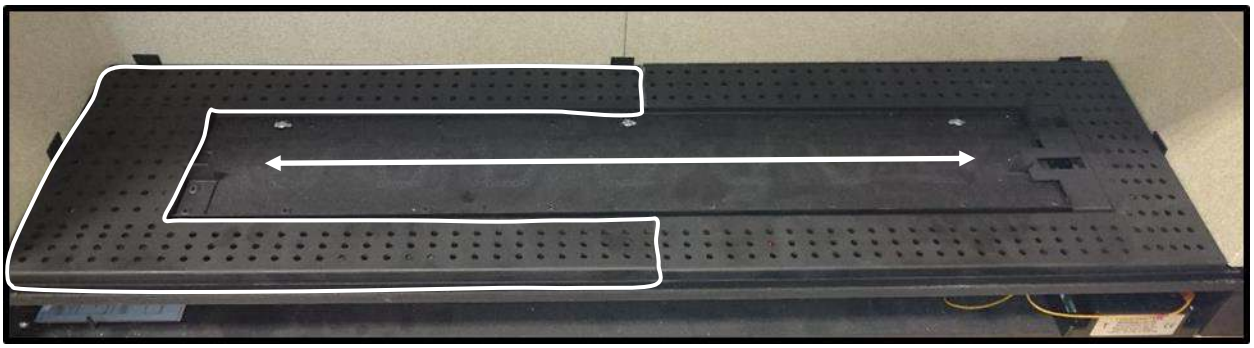

Push both sides of the air tray against the side of the fire box leaving a small gap in-between the two halves of the air tray as shown below

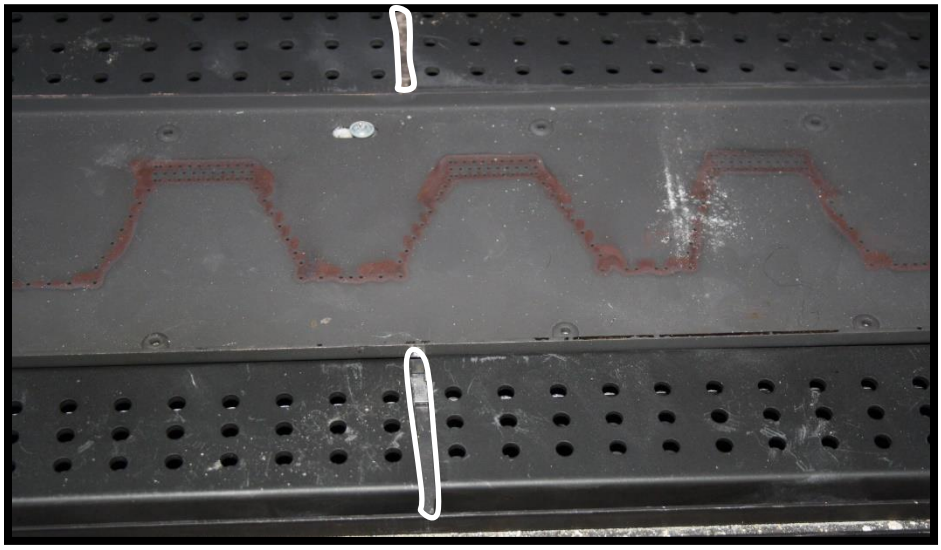

Place a single layer of the forge embers across the burner spreading them out evenly

Note: by applying more than one layer may result in excessive sooting and produce a poor flame picture

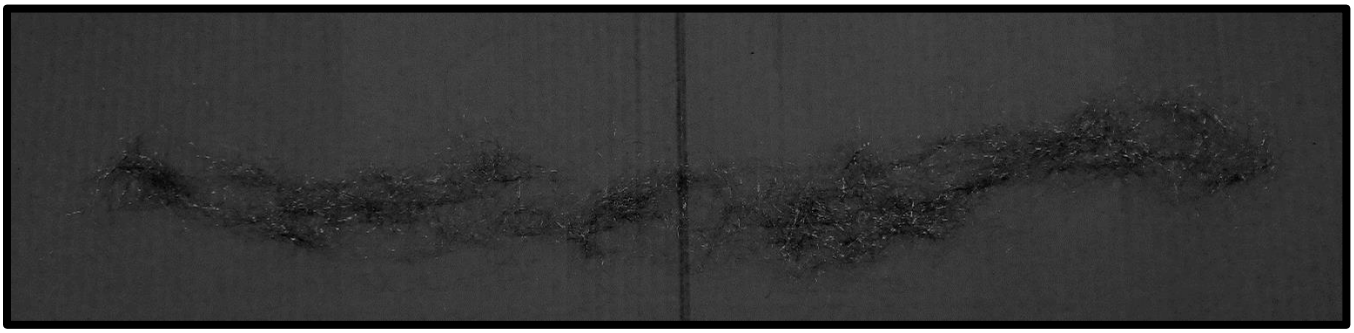

Stretch out the Embaglow fibers out so that they form a loose and thin network then lay the network across the back of the layer of forge embers, try and ensure that there is no clumps of the fibers to allow the gas to flow through. Please note that these fibers are made of metal and must be kept away from the pilot so it does not short and prevent the pilot from lighting

NATURAL GAS ONLY

Lay a single layer of the bark chippings across the front edge of the air tray as shown in the image above

These shapes that are placed at the back of the firebox and the rear surface of the log is a flat edge which needs to be placed against the rear liner.

Rear log shape with flat surface on the rear

Normal log which is rounded

Place the three rear shapes as shown touching the rear liner

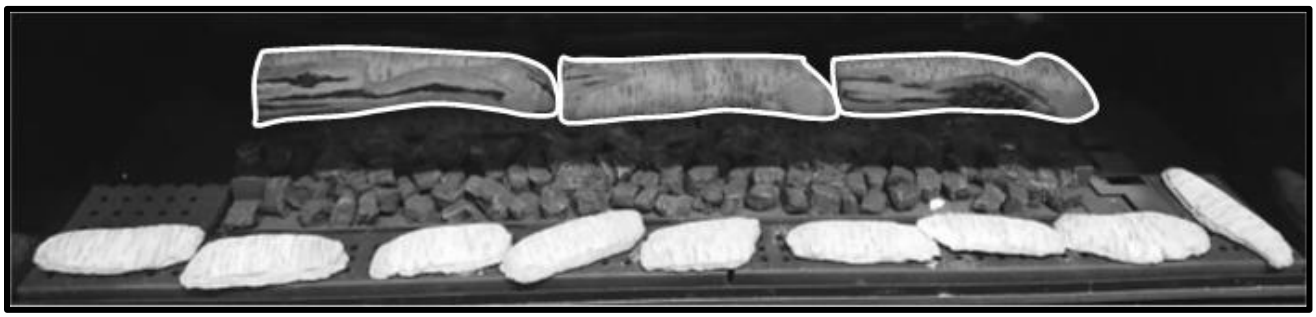

Place the first log as shown

Place the next log as shown

Place the next log as shown

Place the next log as shown

Place the next log as shown

Place the next log as shown

Place the last log as shown

Technical Specification

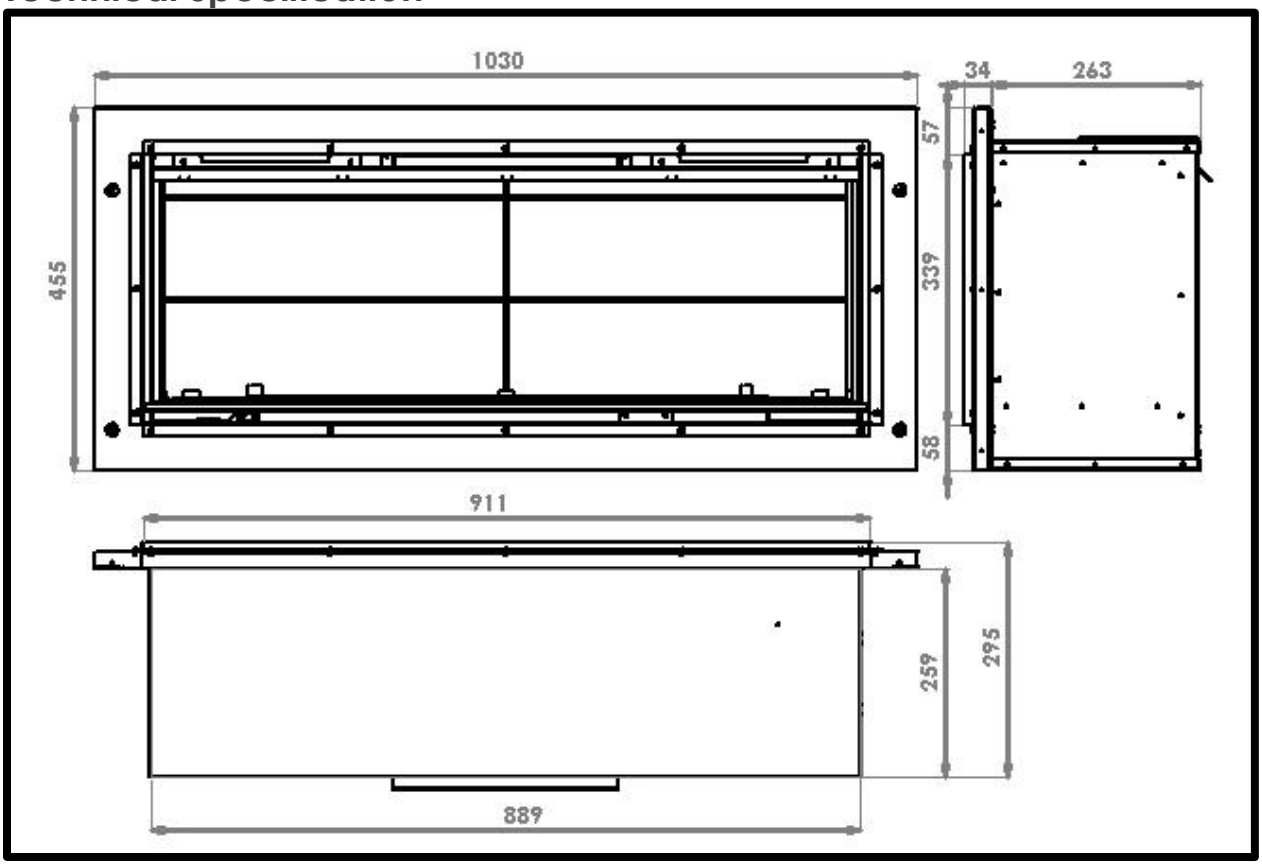

Model	Gas CAT	Gas Type	Working Pressure	Injector	Gas Input	NOX Class	Oxy Pilot	Country
890 HD	I2H	Natural Gas	20 mbar	Mrk 460A	6.6 KW Gross	5	2900 NGR	GB, IE
890 HD	I3P	LPG	37 Mbar	Mrk 109	5.2 KW Gross	5	LPG 9264	GB,IE

Note : The efficiency of the appliance has been measured as specified in BS7977-1 2009+ A1:2013 and the net efficiency rate is 73.4% for natural gas and 74.9% for LPG. The gross calorific value of the fuel has been used for this efficiency calculation. Gastec have certified the test data from which it has been calculated. The efficiency value may be used in the UK Government's Standard Assessment Procedure (SAP) for energy rating of the dwelling. Within the appliance packaging will be an outlet restrictor, this is there to achieve the maximum efficiency. This, however may not be fitted due to the flue underperforming.

Packaging Check List
1 x Glass Panel
1 x Air Tray Assembly
1 x Boxed Fuel Bed
1 x Transformer Plug
1 x Battery Holder
1 x Emergency Power Battery Adaptor
1 x RF Handset
4 x AAA 1.5V Batteries

Siting the Appliance

Regulation and warnings

This appliance must only be installed in Great Britain and Eire.

The appliance is suitable for use on natural gas or LPG only.

When fitted in the GB the fire does not normally require purpose provided ventilation

In GB it is the law that all gas appliances must be installed by a competent person GAS SAFE registered installer, in accordance with the Current Gas Safe (installation and user) Regulations. All relevant parts of the local and national building regulations and all relevant recommendations of the following British standards. Failure to do so could lead to prosecution.

The following are relevant codes of practice and British Standards:-

B.S 5871

B.S 5440 Part 1 & Part 2

B.S 6891

This appliance must be installed to current versions of the above standards and include any relevant amendments to:-

The building regulations issued by the department of the environment.

The building standards (Scotland) (Consolidated) Regulations issued by the Scottish development office.

Eire the appliance must be installed by a competent person and installed in accordance with the current edition of I.S 813 document gas installation, the current building regulations and the current ETCI rules for electrical installation, if appropriate.

Prior to installation ensure that the local distribution conditions (identification of the type of gas and pressure) and adjustment of the appliance are compatible G20 @ 20 mbar or G31 @ 37 mbar.

The front of the fire act as a dress guard, conforming to BS 1945 (1971) and satisfies the heating appliance regulations (1991). However, a guard conforming to BS6539 (1984) must be used to protect young children, the elderly or infirm.
This appliance incorporates a safety device in form of an oxygen depletion system. It must not be adjusted or put out of operation. This is a non – serviceable item and must be exchanged as a complete assembly using only the original manufacturer's part.

A suitable proprietary fire surround with a 150 degree C minimum rating is required.

Class One

That is a conventional brick or stone chimney as used for a solid fuel appliance with an effective cross sectional dimension of 225 x 225mm or a lined flue with a minimum diameter of 125mm. The chimney must have a minimum effective height of at least 3 metres. Any permanent flue restriction or variable damper are to be removed or locked fully open. The chimney should be swept prior to installation if it has previously been used with a gas appliance or if it is a new installation.

The 890 HD is designed to be fitted into a class one flue with a fire place which will require a 50mm rebate. The other option is hole in the wall which can be plastered up to the edge of the fire place frame or fitted with wall mounted non-combustible slips. The two methods will require different size apertures.

Builder's opening aperture size when fitted in conjunction with a four sided trim

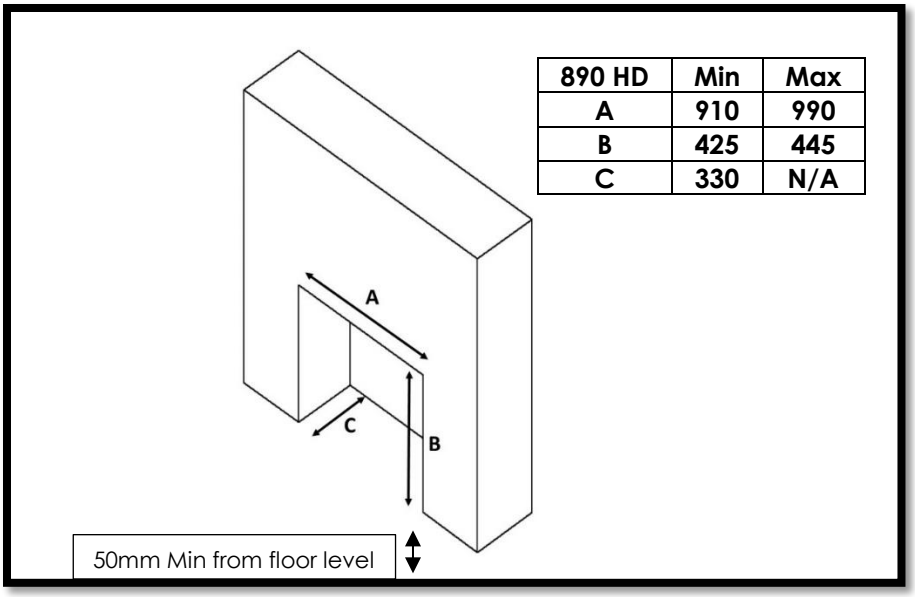

890 HD	Min	Max
A	910	990
B	425	445
C	330	N/A

Open the firebox aperture as of the sizes stipulated in the previous section (50mm rebated surround). Please note the fire box height from the floor may well vary dependent on the fireplace surround design. Check the fireplace details first. Slide the fire box back into the catchment area and secure the fire box against the front face of the chimney breast. Fit the fire place frame to the fire box flange. The fireplace surround can now be constructed.

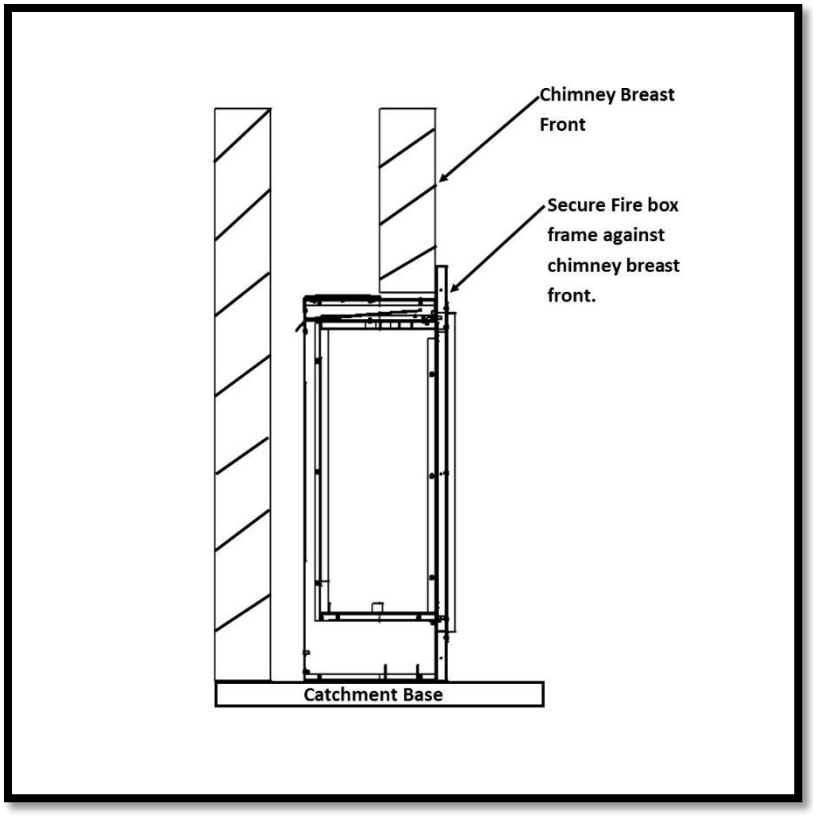

The 890 HD can be installed using three different methods when going hole in the wall.

A- Hole in the wall using none combustible slips.

B-Dry lined hole in the wall.

C-Wet plaster hole in the wall.

A- B-C / Builder's opening aperture size when fitting hole in the wall plaster edge, slips.

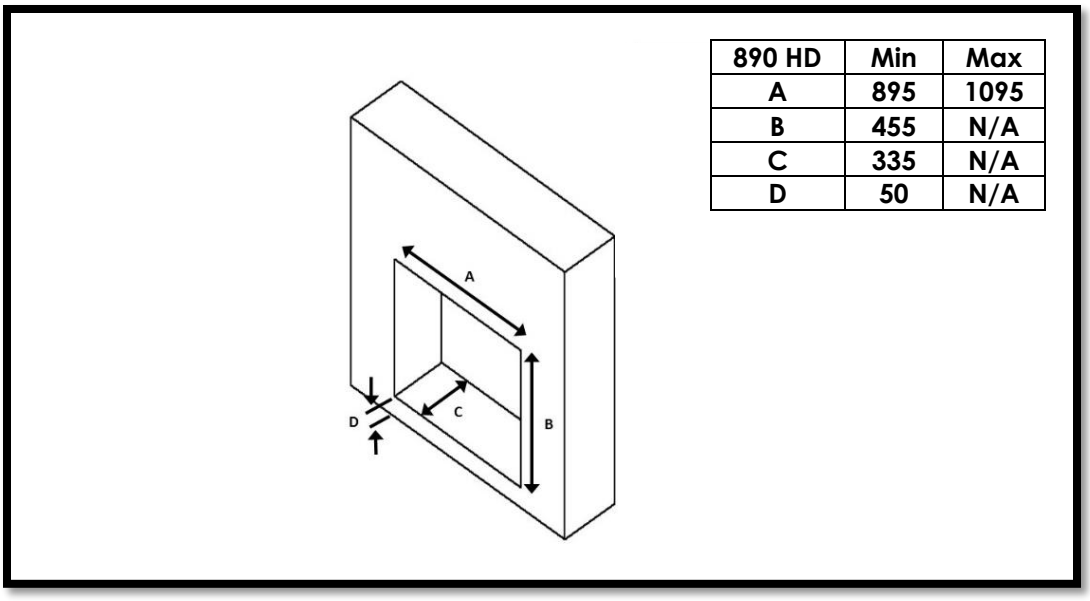

890 HD	Min	Max
A	895	1095
B	455	N/A
C	335	N/A
D	50	N/A

A-Hole in the wall using none combustible slips.

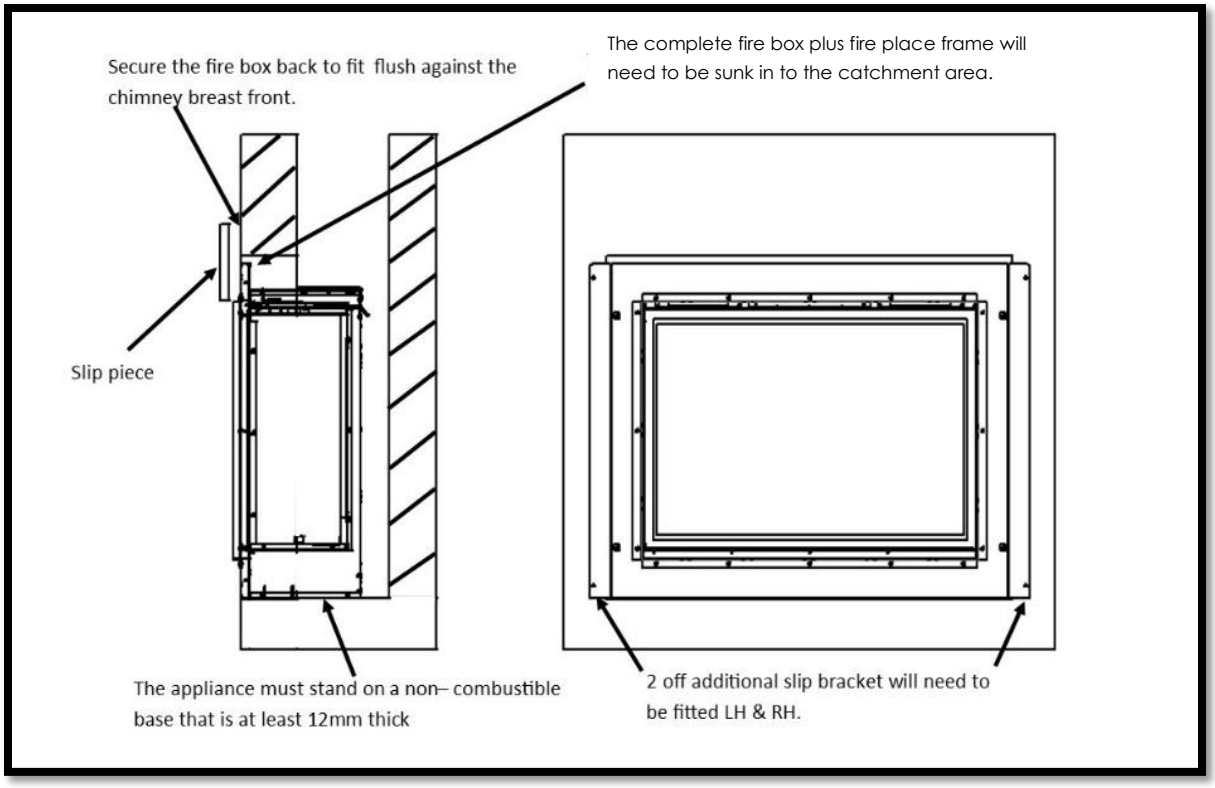

Using rawl plugs and wood screws retain the fire box via the 6mm holes within the slip brackets. None combustible slips can now be fitted up to the edge of the fire place frame.

B-Dry lined hole in the wall.

Fig 1

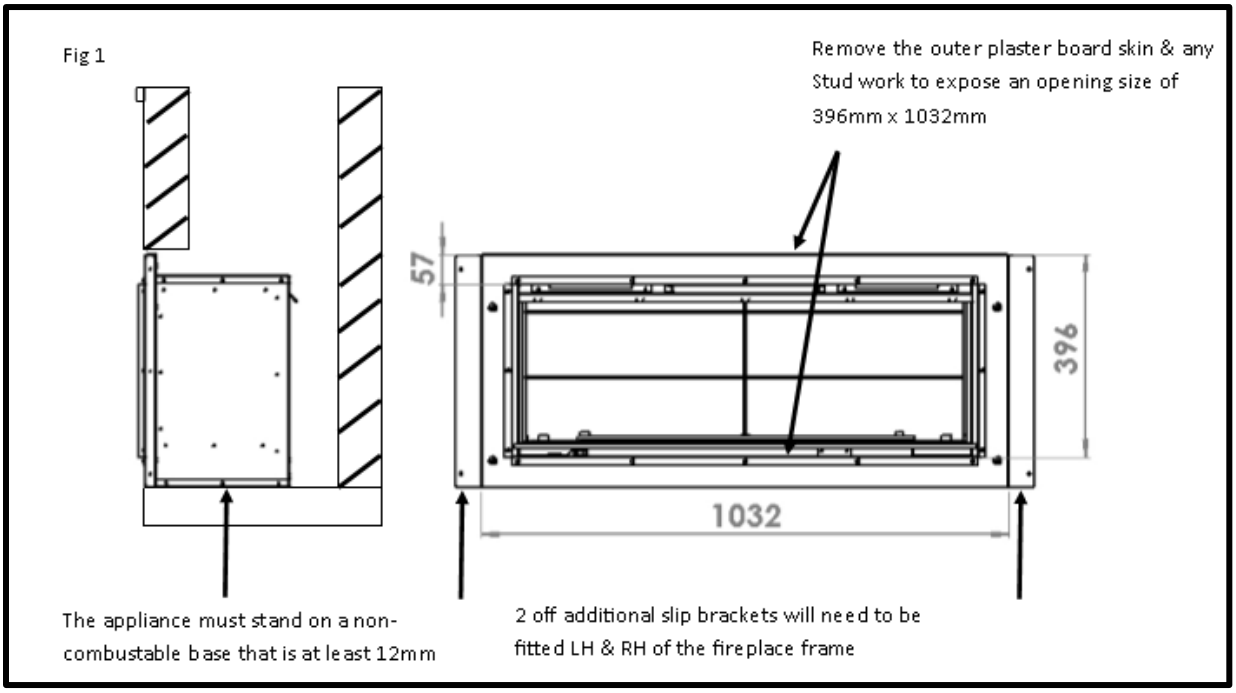

Fig 2

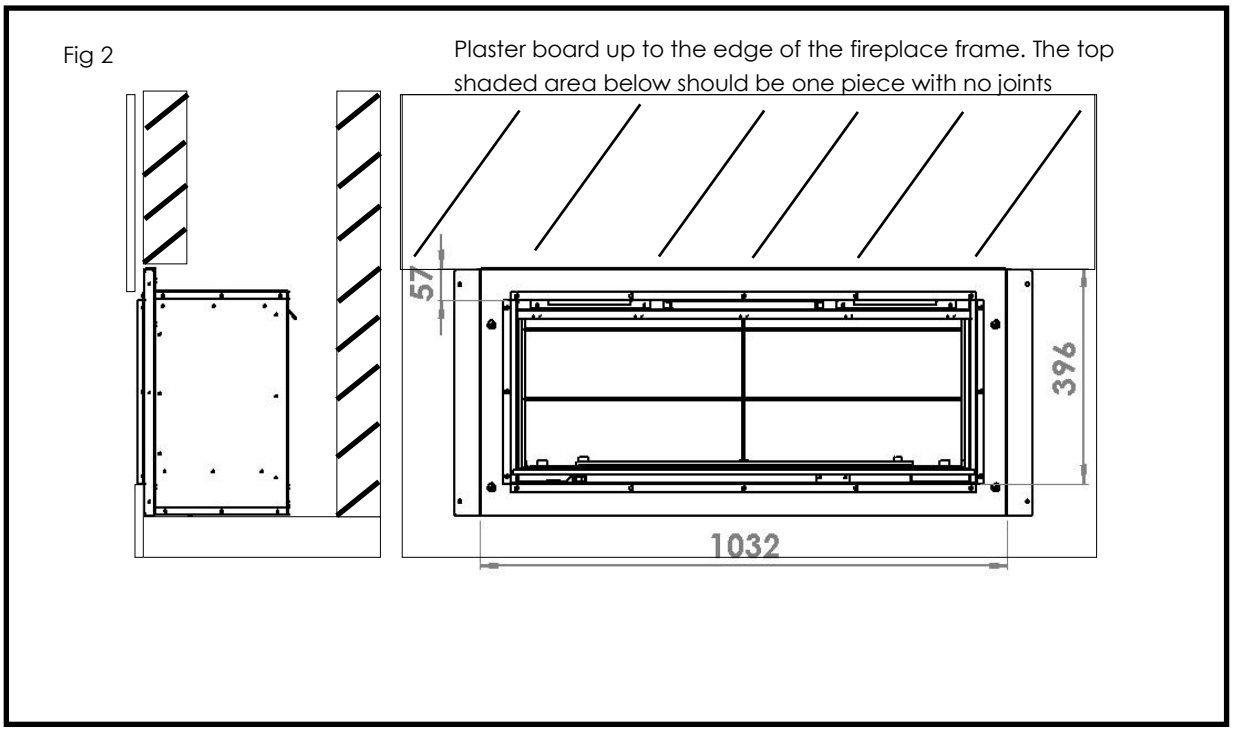

Open the aperture size to accommodate the fire box as out lined at the beginning of the section. With the height of the opening established and support for the fire box in place, take out a further area of the plaster board lining to expose the inner brick work face of the chimney breast as out lined in Fig 1.

The exposed area should be 447mm from the base of the fire and 1135mm in the width. With the slip bracket attached to the fireplace frame. Secure the fire box back against the inner brick work face of the chimney breast using rawl plugs and wood screws.

New plaster board can now be fitted to cover the exposed metal work, making sure that no plater joints are positioned directly above the unit as highlighted in the Fig 2 above.

C-Wet plaster hole in the wall.

When the chimney breast front has been finished using wet plastered method and the total thickness of the bonding plus finishing plaster is less than 12mm. The following method will need to be applied.

Fit the fire box using the guidance stipulated earlier in the section when fitting the fire box with none combustible slips. With the fire box secured fit 15mm thick plaster board section to cover the complete front area of the chimney breast up to the forward projected edge of the firebox frame. Please note avoid any plaster board joints directly above the unit.

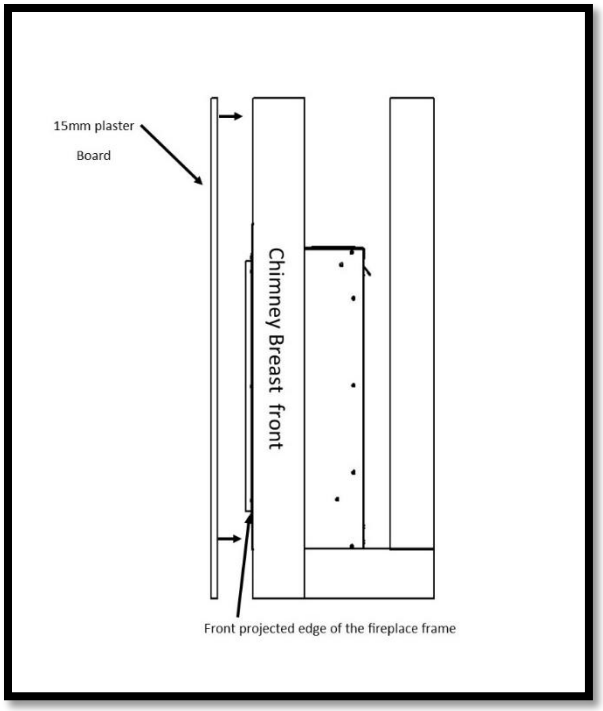

Checking the flue fire opening and fire opening.

Check that the chimney conforms to the required specification as previously stated. Examine the condition and carry out any remedial work including removing any debris from the base.

If the flue has been used for solid fuel it should be swept prior to installation.

Prior to installing the appliance a smoke test (using a bomb) should be carried out to check that satisfactory smoke clearance has been established. If all the smoke is not drawn into the flue, pre-heat the flue with a blowtorch or similar and retest. If there is any uncertainty examine for the cause and if necessary seek expert advice.

When installing the appliance against a dry lined plasterboard wall ensure that the void between the plaster board and wall is sealed with a non-combustible material.

No combustible material should be fitted inside the fireplace opening.

Installation with a flexible liner

The 890 HD is designed for installation within the masonry chimney with or without a flexible line.

If the flexible liner option is required the following two methods should be followed.

Method 1

A 125mm minimum diameter liner conforming to BS 715 may be used. Providing a suitable sealing plate is fitted to the base of the liner and the appliance does not restrict the opening into the liner. Ensure a smooth lead into the flue way and no combustible materials are used. A void of 50mm must be maintained from the top of the firebox into flue.

Method 2

Using the flexible liner gather hood (Part No A-0662). Using again 125mm minimum diameter liner conforming to BS 715, route the flexible liner within the masonry as of the requirements stipulated by the liner manufacturer.

Attach the gather hood to the liner using a suitable fixing at a height that clears the firebox assembly.

Remove the inner and outer inspection plate situated within the rear of the fire box assembly (Please see Fig 1).

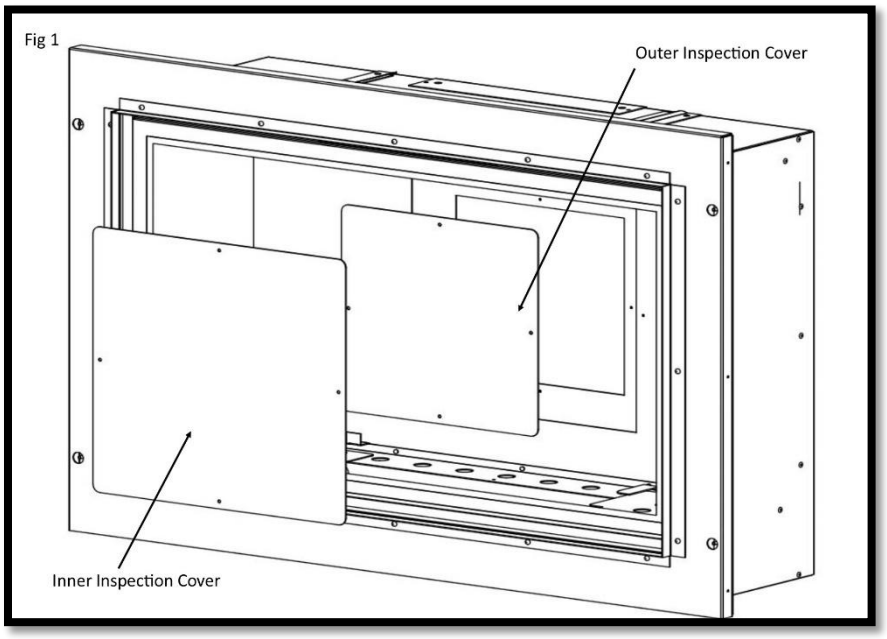

Offer the fire box assembly within the masonry aperture at the same time guiding the gather hood within the guides situated on the top of the fire box (Please see Fig 2). Engage the hood studs within the slotted holes and secure using the three M4 nuts provided within the gather hood kit.

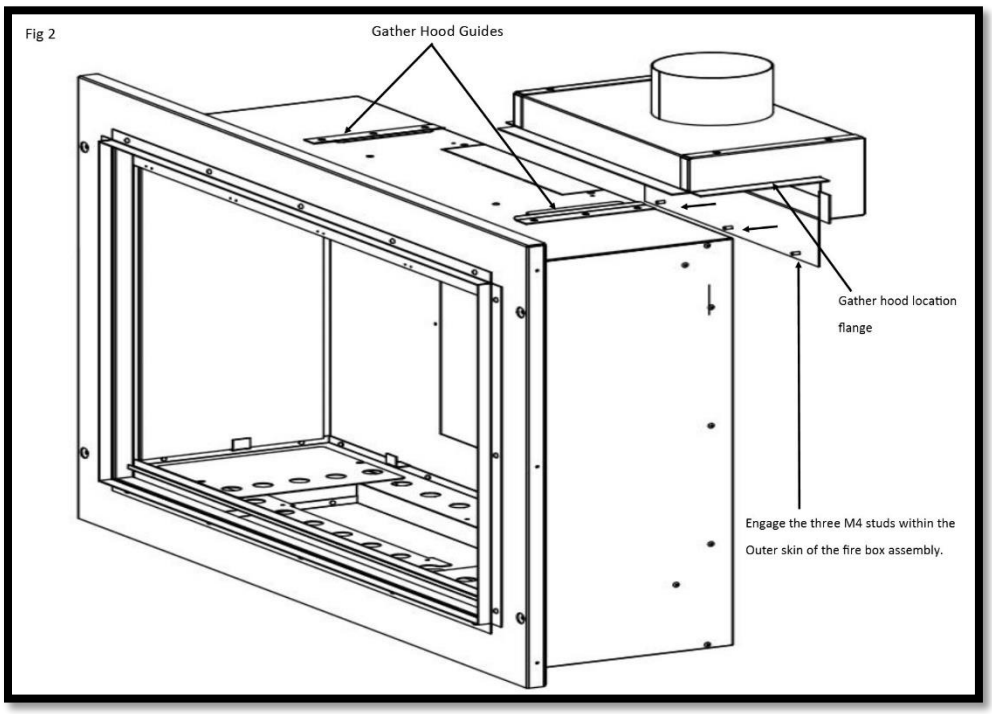

Installation of the Appliance

Optional Wi-Fi Kit Installation

Set up video can be found at:	
Apple: http://www.charltonandjenrick.co.uk/appleguide/	**Android:** http://www.charltonandjenrick.co.uk/androidguide/

The Kit contains the following components:

- 1 x Wi-Fi Dongle.
- 5 x self adhesive aluminum clips.
- 1 x Wi-Fi lead.
- 2 x M3 nuts and washers

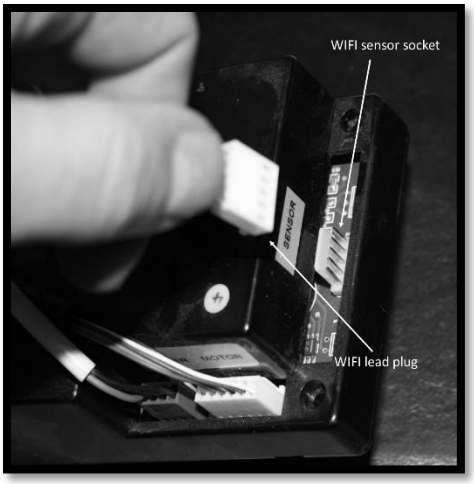

Remove the 2 off screws retaining the ECU cover from the LH side of the burner carrier. Lift off the cover plate to allow access to the ECU unit.

Within the ECU unit will be a clear port connection labeled "SENSOR." Inset the Wi-Fi connector plug within the open port.

Connect the opposite end to the lead within the Wi-Fi Dongle.

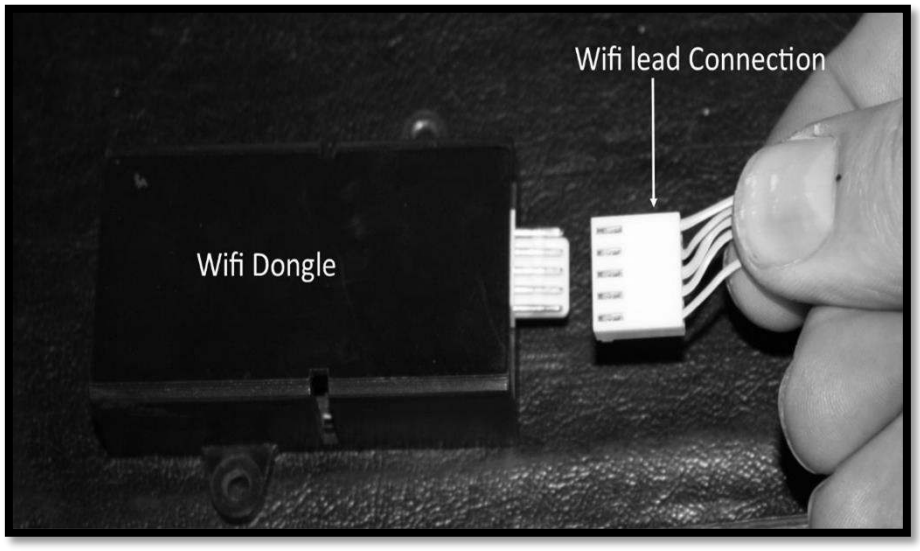

With the dongle connected to the lead, locate the unit within the two M3 studs position on the left hand side of the fire box. When positioning the Wi-Fi unit it is important to have the cable socket facing the rear of the fire box. **(Please note when installing the dongle with appliances using a four sided trim option. The studs with the base of the fire box unit should be used. Failure to do this could result in over heating issues).**

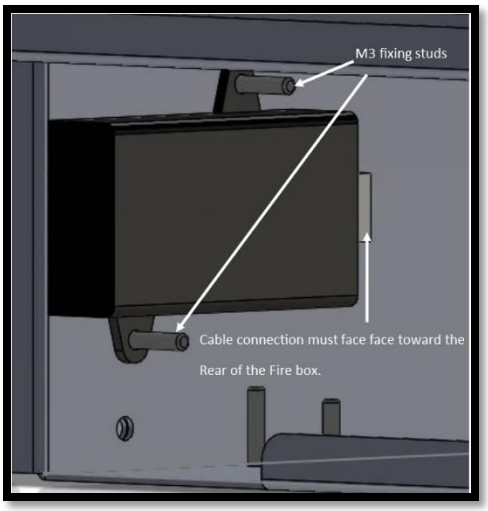

Retain the Wi-Fi dongle receiver using the nuts and washers provided.

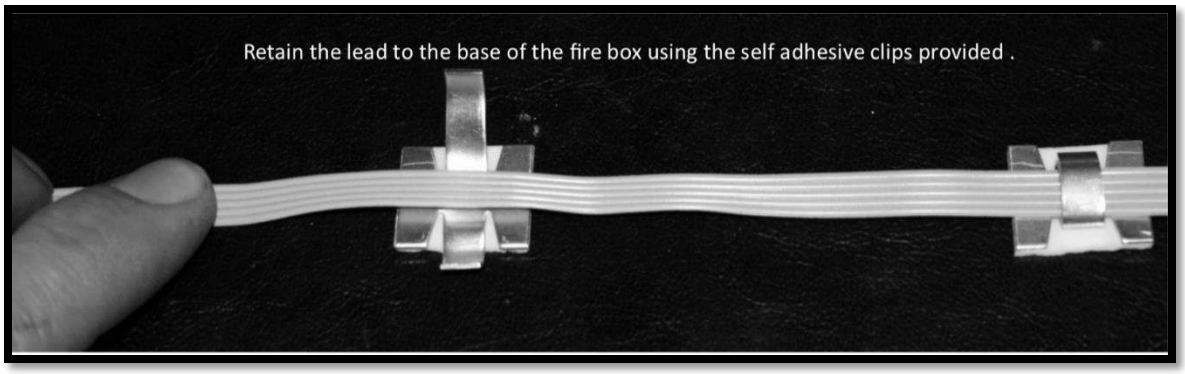

Finally using the aluminum clips provided retain the excessive lead to the base of the fire box.

Gas supply routing.

Check the gas run to assess that the gas supply is capable of providing the required amount of gas and is in accordance with the rules in force.

Soft copper pipe can be used to install the appliance. Soldered joints can be used only externally of the appliance.

The appliance is supplied with a factory fitted isolation device to allow for an 8mm copper connection. No further isolation point is required.

The new gas line must be purged of any debris, prior to final connection to the appliance.

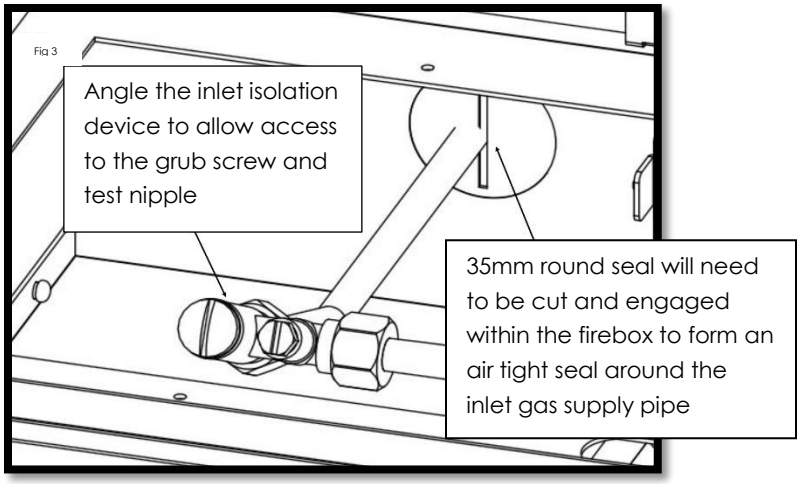

Gas inlet isolation device is located on bottom left hand side of the fire box, the gas supply entry point is positioned at the rear bottom on left hand side. With the appliance fixing kit is a 35mm round seal (Please see fig 3), this should be cut and fitted over the 8mm copper at the point the gas supply entry into the appliance assembly. The gas inlet cover will need to be removed to gain access to the connection. (Please see fig 4).

The gas inlet isolation device must be angled to allow access to the grub screw and gas test nipple. (Please see fig 3).

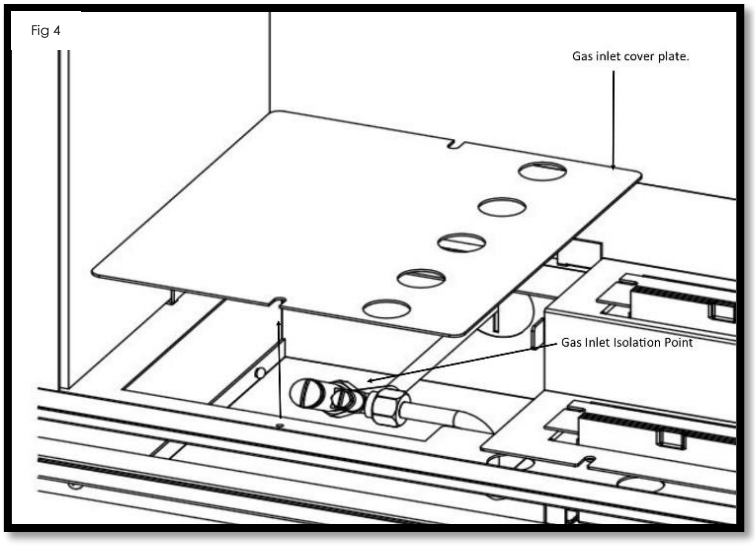

Power lead routing

The power supply for this appliance is provided via AC power adaptor 230 VAC. The main cable terminates the rear Right hand side of the fire box. The length of the cable provided with the appliance is 1.65 metres. Care must be taken when siting the fire box not to trap the exposed main cable within the builders opening.

Note: the power cable link to the transformer must be accessible for repairing handset and use with the battery holder

The cable can be routed using the following two methods,

Method 1

Passing the cable through the side of the chimney breast. It is good practice to run the cable within a sleeve of at least 15mm internal diameter, sealing the sleeve using a suitable sealant at the point the sleeve / cable terminates the chimney masonry.

Method 2

Remove a channel out of the outer skin of the Dry / wet plaster of the chimney breast up to the main power point. Again it is good practice to run the cable within a sleeve of at least 15mm internal diameter.

With power points that exceed the 1.65 metre distance, an optional 2.0 metre extension cable is available Part No 7147.

The cable system consists of retro fitting plug sockets which offers the following options. (Please see figure 5).

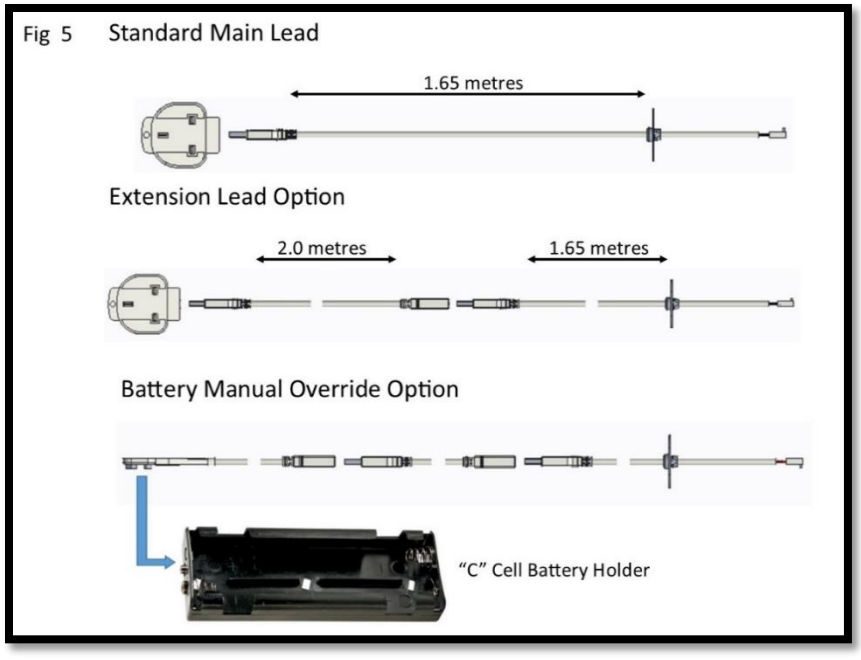

The battery manual override option is a back-up supply in case of a power failure / power cut to the property. The battery holder and adaptor lead are provided within the packing of the appliance. (Please note that the "C" cell batteries are not included). It is good practice to demonstrate the battery option to the customer during the commissioning process.

Fire Box Installation

Note: - When installing the appliance with a 3 inch (75mm) rebated surround the option 30mm spacer frame Part No 7572 will be required.

The fire box assembly can be retained using the following two methods.

Secure the firebox when fitted with 50mm rebated surround

Using suitable rawl plugs and wood screws retain the fire box using the four 6mm holes within the firebox flange. With the fire box secured, slide the fireplace frame assembly over the four 4mm studs projecting forward from the fire box flange. Fix the frame to the fire box using the M4 nuts and the nut spinner provided within the appliance packaging. (Please see figure 6)

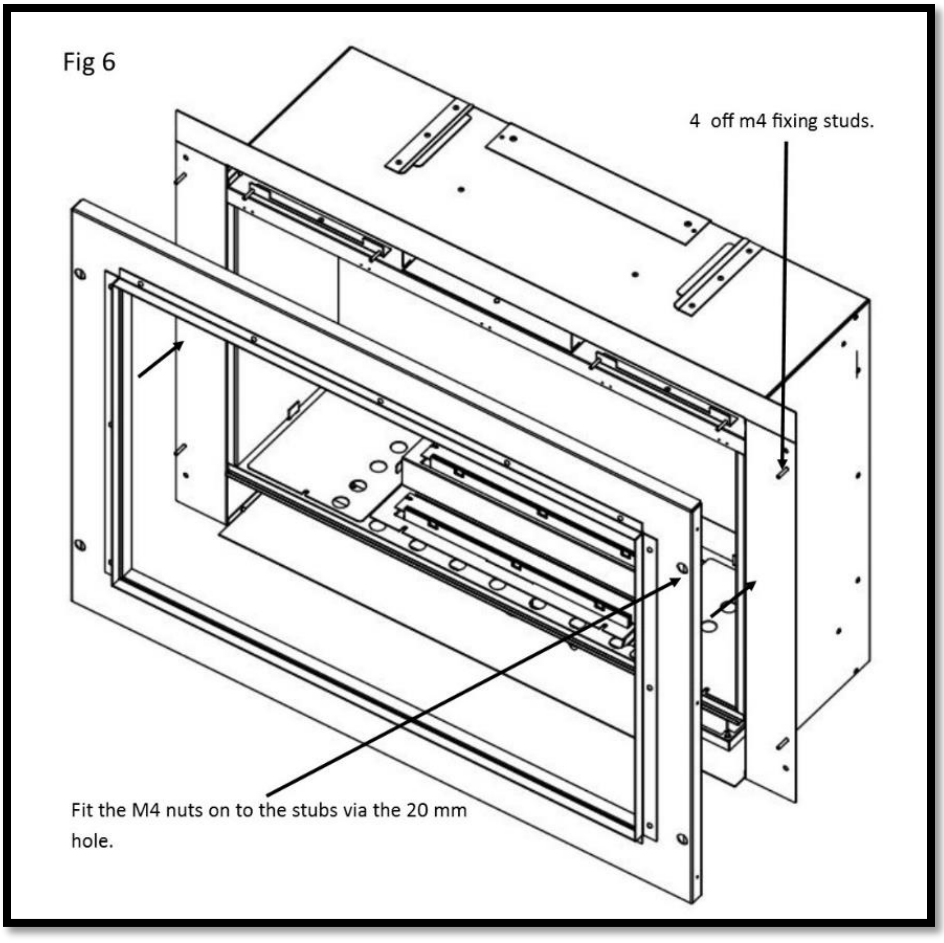

Hole in the wall.

For hole in the wall installation, two additional fixing brackets will be needed that are attached to the fireplace frame LH and RH. Attached the two brackets using the 6 off fixing screws provided with the kit. Secure the complete assembly using suitable rawl plugs and wood screws via two 6mm holes within the wall fixing brackets. (Please see Figure 7).

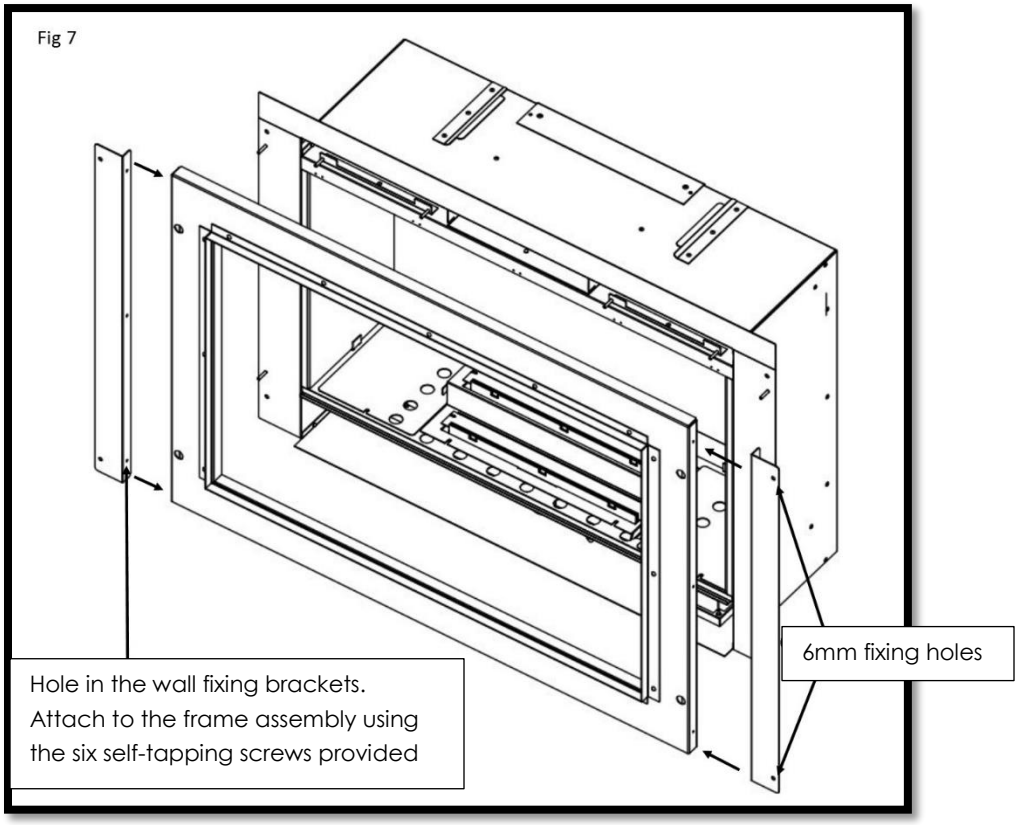

(Please Note). The fireplace frame is supplied with the slip guides attached. To improve the overall appearance of the appliance the guide brackets can be detached by removing the No 6 shelf tapping screws from within the fireplace frame assembly.

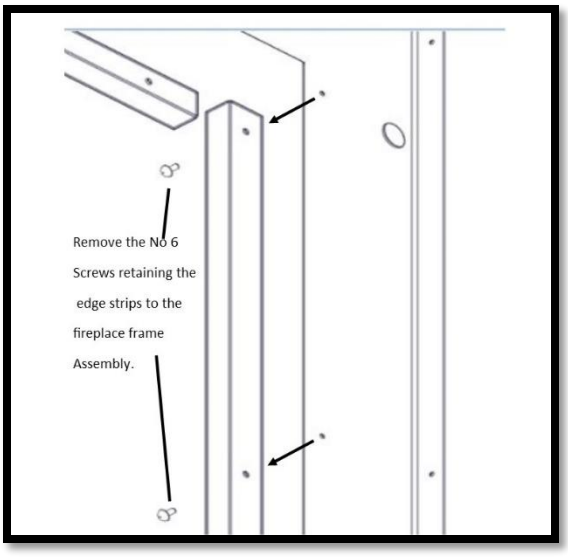

Four sided trim

Please note when installing the appliance using this method it is very important to maintain a gap of 50mm from the underside of the fire box base to the floor. Failure to do this will result in damage to the operating components.

Using suitable rawl plugs and wood screws retain the fire box using the four 6mm holes within the firebox flange.

When installing using the four sided trim option. The follow additional bracket will need to be fitted.

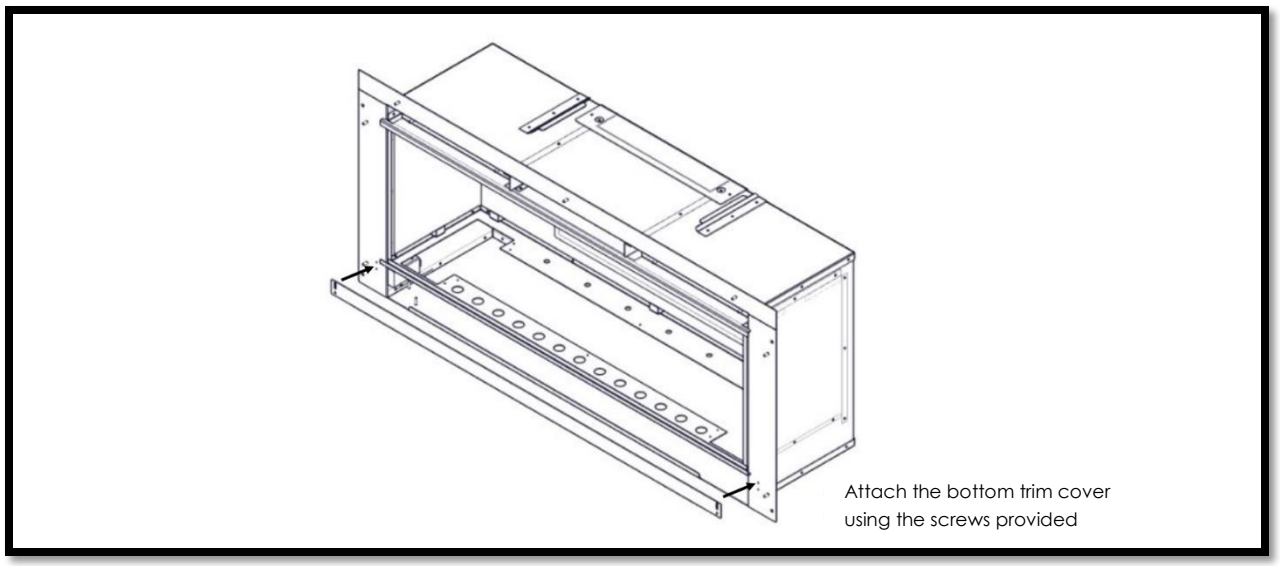

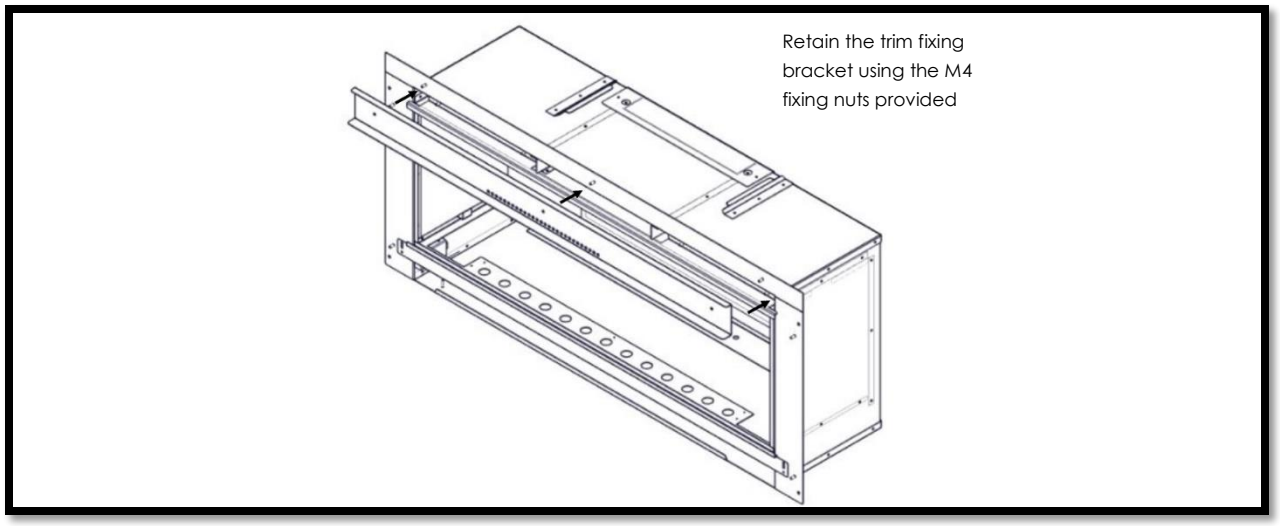

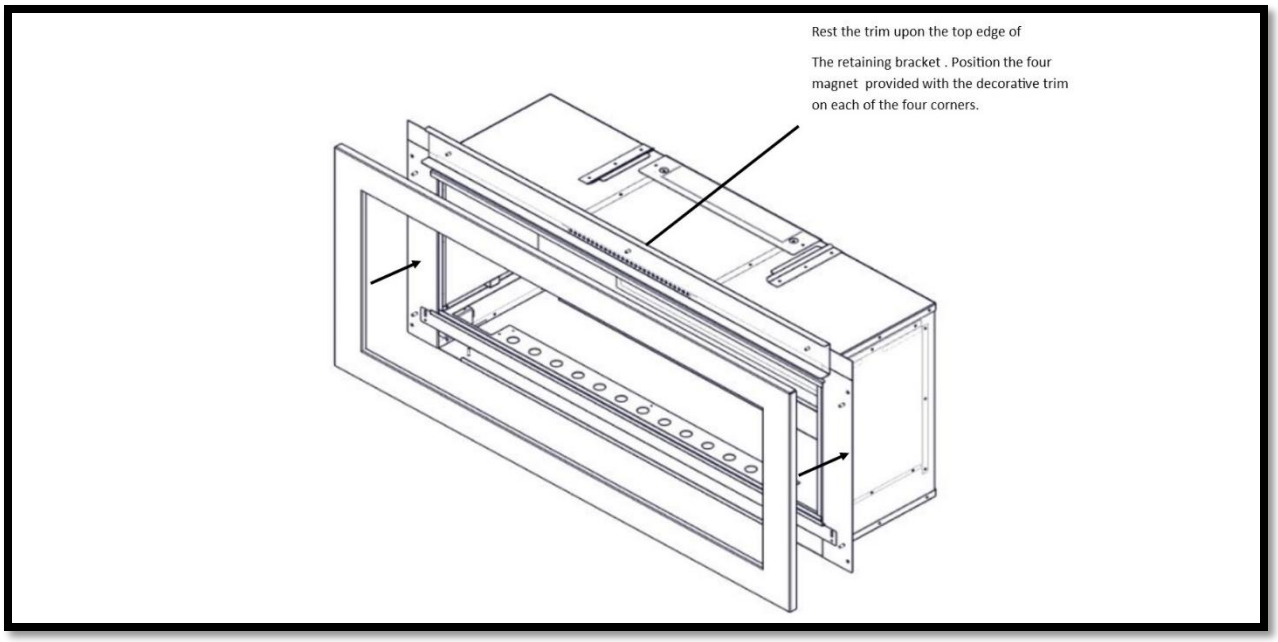

Commissioning the Appliance

Checking gas soundness and running pressure.

Turn on the supply to the appliance and check for soundness in accordance with the current codes of practice.

Turn off the gas supply at the external isolation valve.

Remove the pressure test point screw from the inlet elbow and connect the pressure gauge.

Turn on the gas to the appliance at the isolation valve.

Light the appliance as described in the user instruction section. Page 5 turn on (startup).

Check the inlet pressure is 20 mbar +/- 1.0 mbar or 37 mbar +/- 1.0 mbar with other appliances running.

Turn off gas supply, at the isolation valve. Disconnect the pressure gauge and replace the pressure test point screw.

Turn on the appliance and check the pressure test point for soundness with detection fluid.

Refit the gas cover as shown in Fig 4(page 31).

Fuel Bed Layout.

Fuel bed layout should be fitted using the guidance stipulated on pages 11-16 of the User Instruction section.

Fit Glass Panel.

Due to transit protection, the glass panel is packed with a protective sleeve within the packed appliance. Special care should be taken when removing the glass panel from the packing. The top fixing is attacked to the fire box via 4 off M4 fixing nuts. Remove the nuts and remove the top fixing bracket. (Please see fig 8 (page 9) within the user instruction section).

Locate the glass panel within the bottom retaining slot and push back against the seals. (Please see Fig 11).

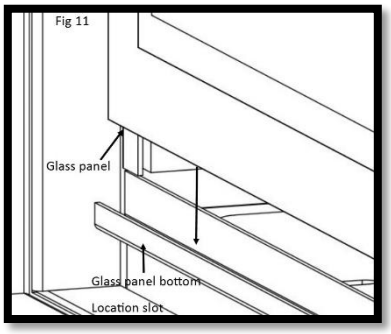

Position the top fixing bracket over the top edge of the glass panel and slide over the four M4 studs.

Using the four M4 nuts previously removed. Tighten the top glass fixing using the nut runner provided with the appliance, take care not to over tighten.

Non reflective glass option.

The non-reflective glass has no print on the glass due to this there is an inner frame provided to be fitted before the glass panel.

Slide the inner frame into the glass channel and push in to place ensuring the tabs are sitting on top of the firebox(see below) ensure the frame is central and there is a even gap either side of the frame (between the side of the firebox and the tabs of the frame)

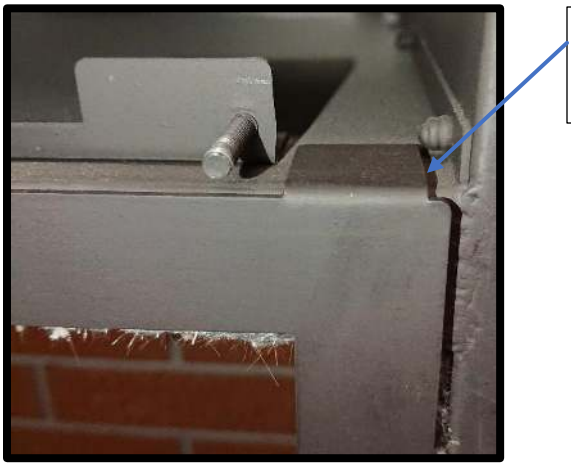

Make sure that the gap here is the same on both sides of the frame

Slide the glass in front of the frame and push in to place making sure that the glass is pushed in to the glass channel properly and sits in the bottom of it and that the inner frame is still central.

Position the top fixing bracket over the top edge of the glass panel and slide over the two M4 studs.

Using the two M4 nuts previously removed. Tighten the top glass fixing using the nut runner provided with the appliance being careful not to over tighten the glass as this will cause breakages.

Spillage Test Procedure.

Light the appliance on maximum setting.

Close all the doors and windows.

After five minutes fit the smoke match within match holder and position as illustrated in Figure 13 with the head of the match just inside the inlet air channel.

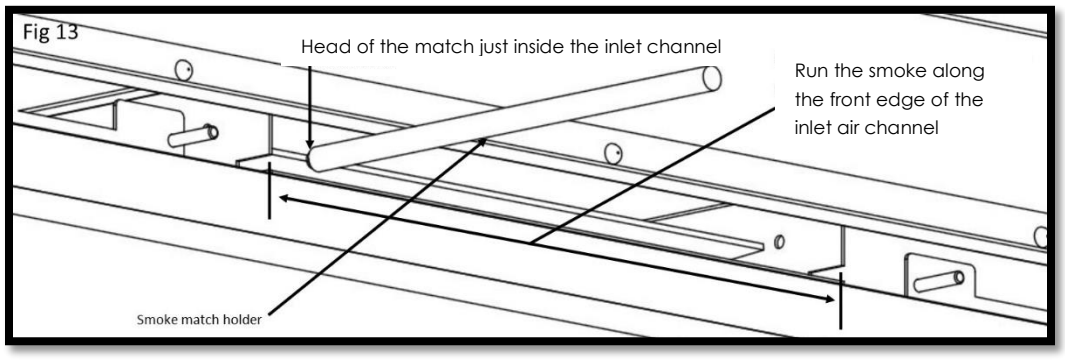

Run the match along the edge of the inlet air channel. All smoke must be drawn into the inlet channel if the spillage test is satisfactory.

If spillage occurs wait a further five minutes and repeat the test.

Repeat the test with doors open and with any extractor fans in other rooms in operation.

If spillage is detected the cause must be discovered and the fault corrected. If the fault cannot be corrected, disconnect the fire from the gas supply and seek expert advice. Spillage can be caused by a restriction in the flue system, down draught or insufficient ventilation into the room where the fire is installed.

Advise The Customer.

The glass front of this fire acts as a dress guard conforming to BS 1945 (1997) and satisfies the heating appliance regulations (1991) however; a fireguard conforming to BS6539 (1997) must be used to protect young children, the elderly, or infirm.

During initial "burn off", an odour may be evident during the first few hours of use. This is due to the surface coating on the metal work "burning off". The odour produced is harmless and will disappear after a short period of time.

Any debris should be cleared from the appliance.

The appliance should be serviced annually by a Gas Safe registered engineer in accordance with the Service instruction section.

Point out the position of the power source for the appliance, plus demonstrate using the additional battery holder and adaptor lead, the battery backup option. ("C" cell batteries not included within this appliance).

Demonstrate the lighting and extinguishing procedures to the user and the removal and refit of the glass panel for cleaning and the fitting of the battery back-up kit.

Hand these instruction over to the user along with the battery holder, adaptor lead plus M4 nut runner for the removal of the glass panel.

Please be aware that the non-reflective glass may in some lights and from some angles have a blue tinge to it this is perfectly normal. Also be aware that if the glass liners are fitted in the fire with the non-reflective glass you will still have a reflection in the glass liners.

Annual Service Requirement.

General

Servicing should be carried out annually by competent person whose name appears on the gas safe register. All Gas Safe engineers should possess an ID carrying the logo below.

Before commencing any service or replacement of part, turn off the gas supply to the fire. After servicing check for gas soundness.

When ordering spare parts please quote the appliance name and serial number.

Check for debris

At least once a year check for debris in the catchment area behind the fire and in the flue way. To undertake this check the following procedure should be followed.

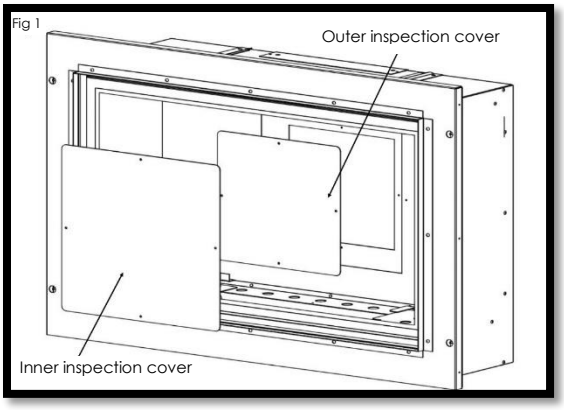

Remove the four M4 nuts fixing the glass clamp to the glass panel. (See Fig 8 – page 9). With the nuts removed, pull the glass clamp clear of the four studs. Finally lift the glass panel out of the bottom glass fixing.

Remove the log shapes.

Lift out the air tray assembly from within the fire box shelf.

Remove the four screws retaining the gas inlet plate and the ECU cover.

Shut off the restrictor elbow and disconnect the 8mm inlet nut.

Switch off the mains supply from the main supply plug socket.

Undo the two M3 nut retaining the ECU unit and remove the connection bracket plus disconnect the mains supply cable from ECU.

Take out the four screws retaining the burner tray assembly and lift out of the fire box shelf taking care not to damage the panels.

Remove the two side liner fixing bracket LH & RH which are situated in the roof of the fire box assembly.

Carefully remove the LH & RH side panels.

Remove the rear panel from within the fire box.

Finally remove the eight screws from the inner and outer inspection covers. (Please see figure 1)

With the covers removed. The catchment area at the rear of the fire box can now be inspected for debris. With the aid of a mirror via the back of the box check the path of the flue for any restrictions.

Re-assemble in reverse order.

Pilot Linting

Check the pilot aeration hole for linting, use a vacuum clearer nozzle taking care not to damage the pilot head. Do not blow compressed air into the pilot as this can lodge debris in the pilot body.

Electrode Gap

The electrode gap should be 4mm from the tip of the thermocouple probe head to the end of the electrode wire.

Spillage test

Follow the procedure stipulated on page 34 of the installation instruction section.

Fault Finding Charts

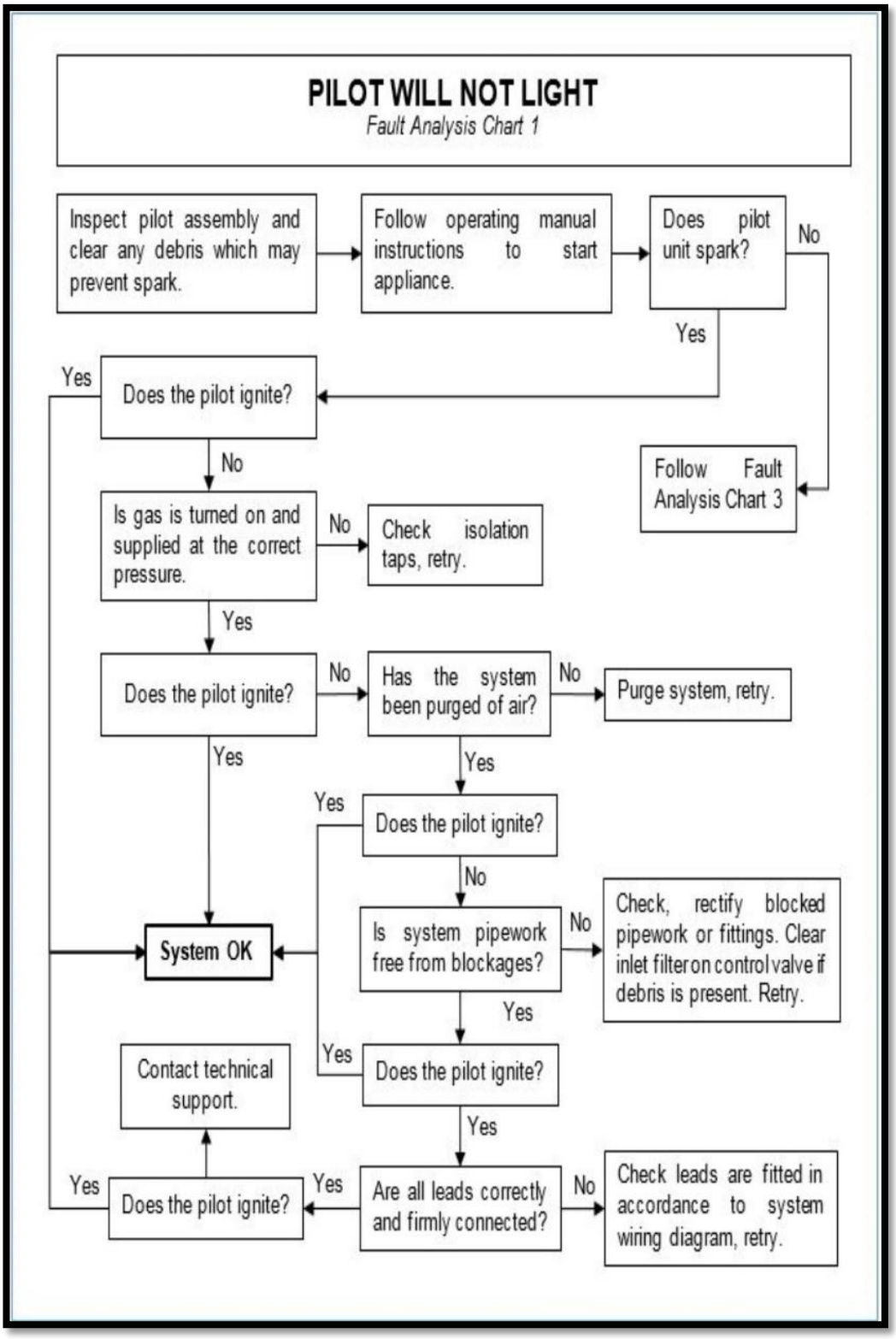

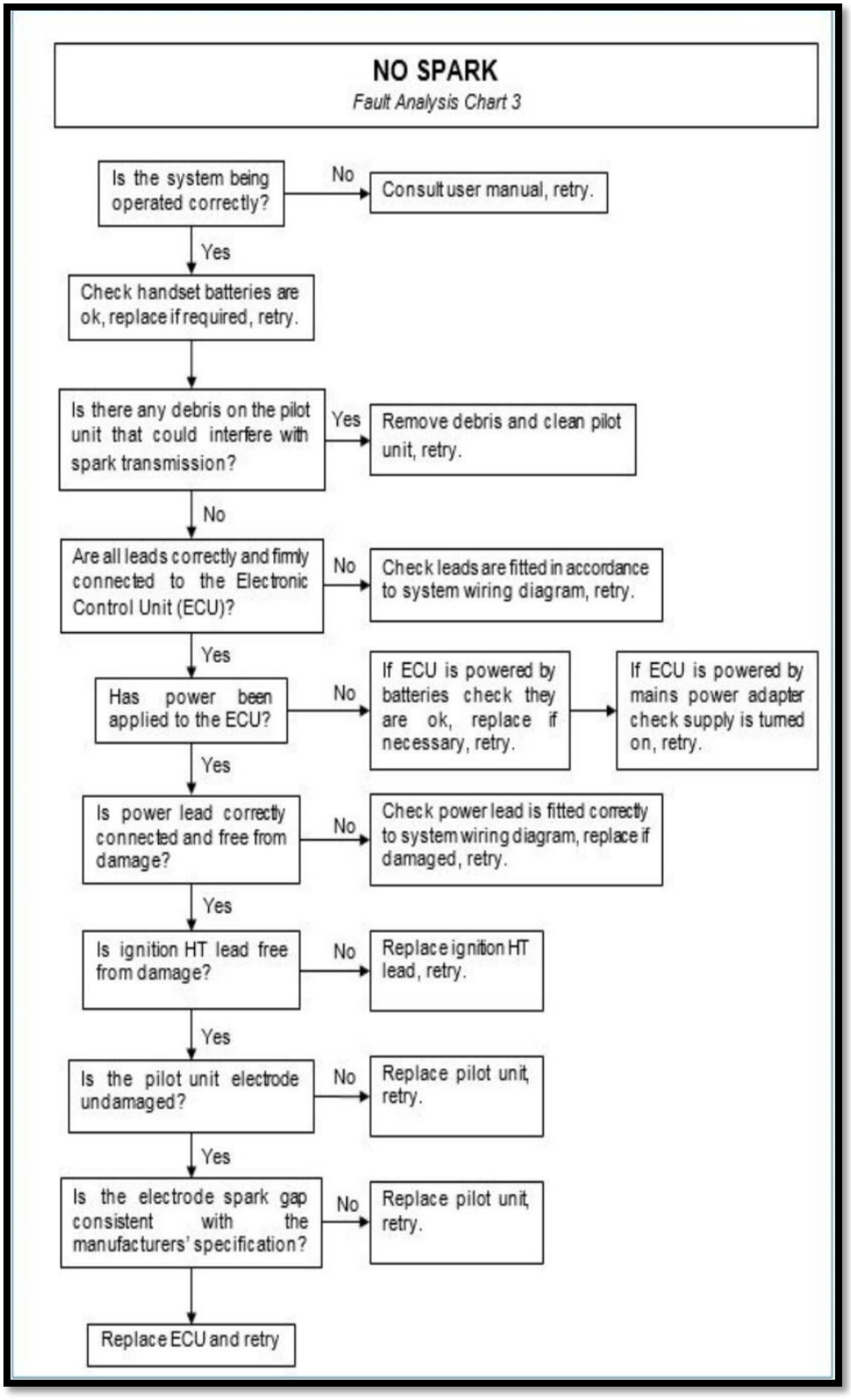
NO SPARK
Fault Analysis Chart 3
Is the system being operated correctly?
No
Consult user manual, retry.
Yes
Check handset batteries are ok, replace if required, retry.
Is there any debris on the pilot unit that could interfere with spark transmission?
Yes
Remove debris and clean pilot unit, retry.
No
Are all leads correctly and firmly connected to the Electronic Control Unit (ECU)?
No
Check leads are fitted in accordance to system wiring diagram, retry.
Yes
Has power been applied to the ECU?
No
If ECU is powered by batteries check they are ok, replace if necessary, retry.
If ECU is powered by mains power adapter check supply is turned on, retry.
Yes
Is power lead correctly connected and free from damage?
No
Check power lead is fitted correctly to system wiring diagram, replace if damaged, retry.
Yes
Is ignition HT lead free from damage?
No
Replace ignition HT lead, retry.
Yes
Is the pilot unit electrode undamaged?
No
Replace pilot unit, retry.
Yes
Is the electrode spark gap consistent with the manufacturers' specification?
No
Replace pilot unit, retry.
Replace ECU and retry

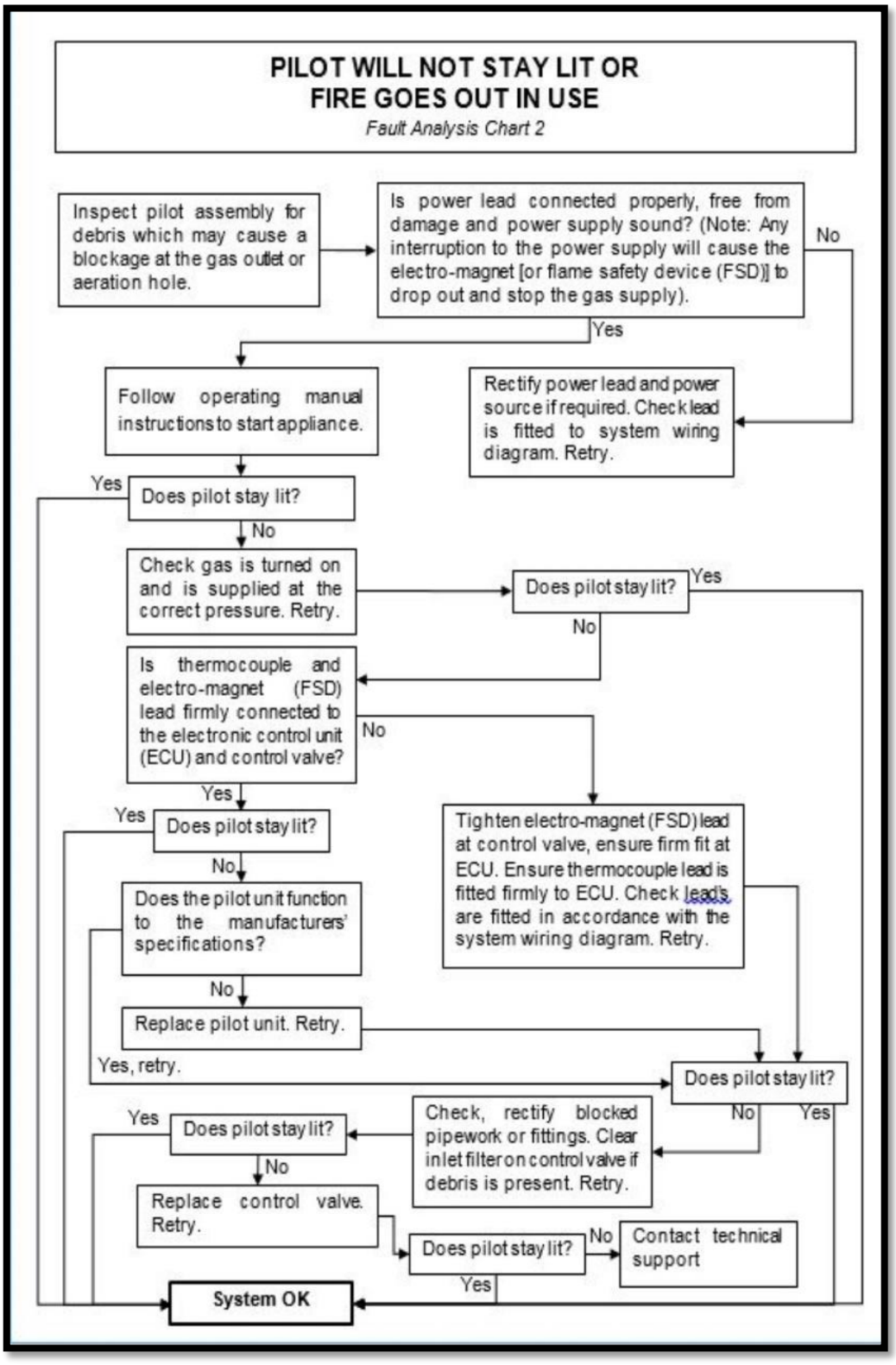
PILOT WILL NOT STAY LIT OR
FIRE GOES OUT IN USE
Fault Analysis Chart 2
Inspect pilot assembly for debris which may cause a blockage at the gas outlet or aeration hole.
Is power lead connected properly, free from damage and power supply sound? (Note: Any interruption to the power supply will cause the electro-magnet [or flame safety device (FSD)] to drop out and stop the gas supply).
No
Yes
Follow operating manual instructions to start appliance.
Rectify power lead and power source if required. Check lead is fitted to system wiring diagram. Retry.
Yes
Does pilot stay lit?
No
Check gas is turned on and is supplied at the correct pressure. Retry.
Does pilot stay lit?
Yes
No
Is thermocouple and electro-magnet (FSD) lead firmly connected to the electronic control unit (ECU) and control valve?
No
Yes
Yes
Does pilot stay lit?
Tighten electro-magnet (FSD) lead at control valve, ensure firm fit at ECU. Ensure thermocouple lead is fitted firmly to ECU. Check lead's are fitted in accordance with the system wiring diagram. Retry.
No
Does the pilot unit function to the manufacturers' specifications?
No
Replace pilot unit. Retry.
Yes, retry.
Does pilot stay lit?
No
Yes
Check, rectify blocked pipework or fittings. Clear inlet filter on control valve if debris is present. Retry.
Yes
Does pilot stay lit?
No
Replace control valve. Retry.
Does pilot stay lit?
No
Contact technical support
Yes
System OK

Wiring Diagram

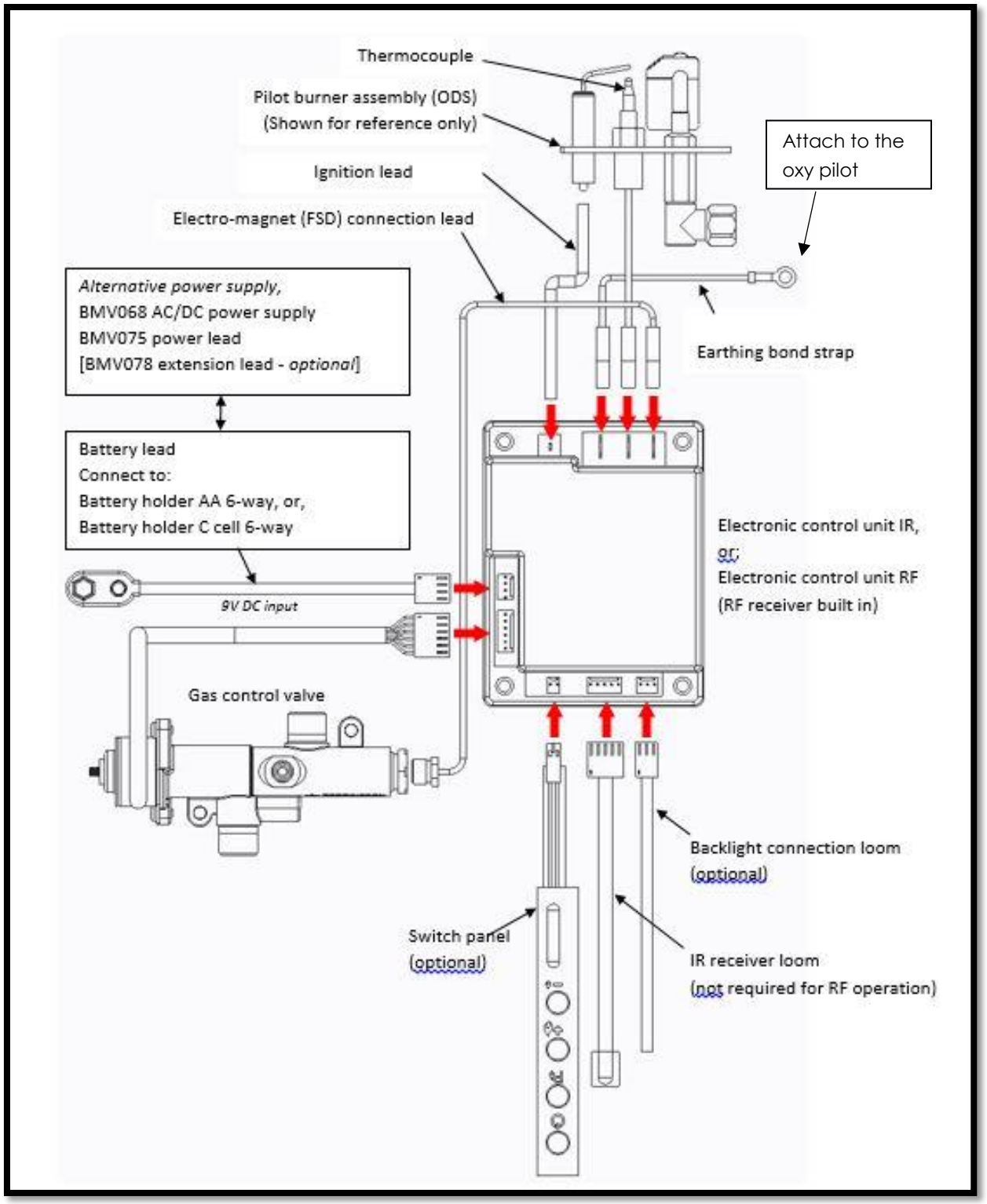

Maintenance

To Remove the Burner Carrier Assembly

Remove the glass panel as described on page 9 of the user's instruction section.

Remove the Loose shapes and the air tray assembly.

Remove the four screws retaining the gas inlet plate and the ECU cover. (Please see Fig 1)

Shut off the restrictor elbow and disconnect the 8mm inlet nut.

Switch off the mains supply from the main supply plug socket.

Undo the two M3 nut retaining the ECU unit and remove the connection bracket plus disconnect the mains supply cable connection.

Take out the four screws retaining the burner tray assembly and lift out of the fire box shelf taking care not to damage the panels. (Please see Fig 2)

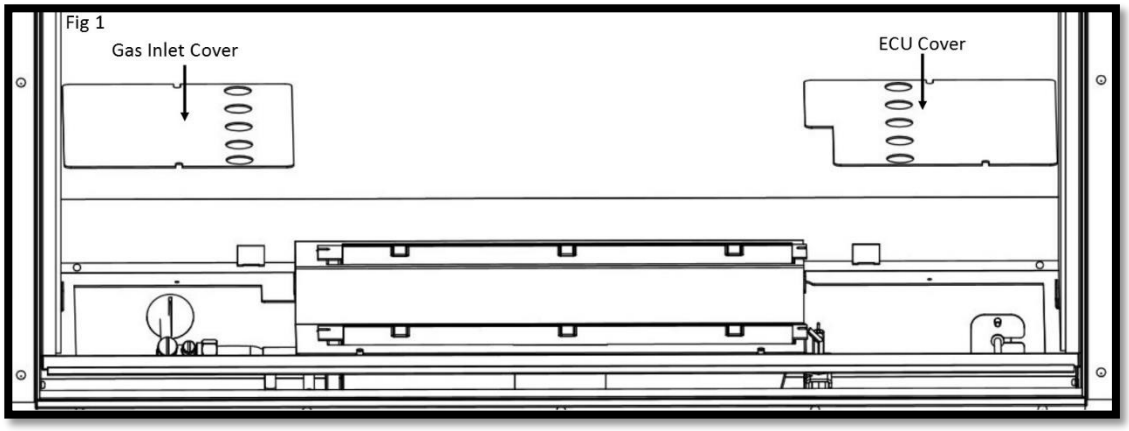

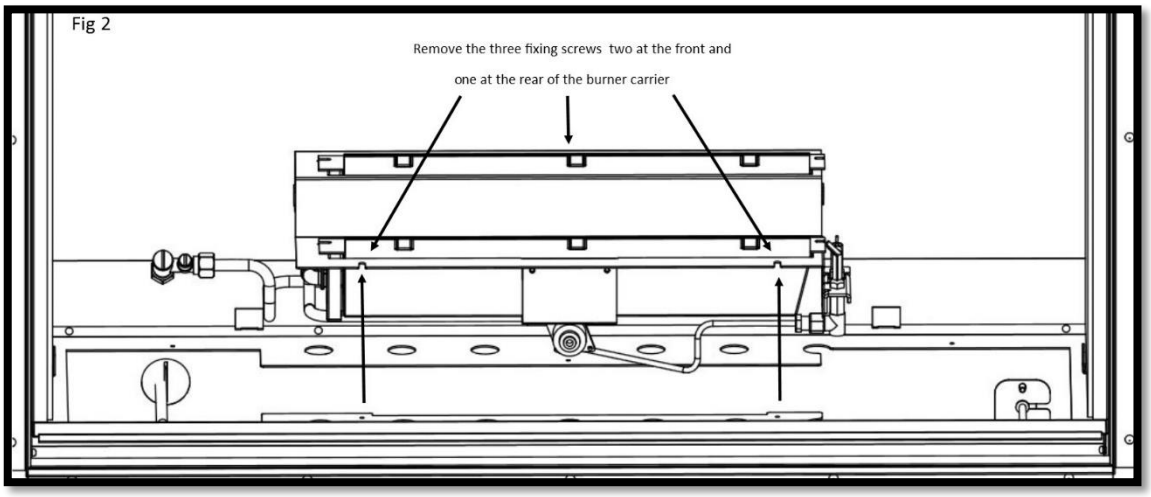

Replacement of The Gas Valve

Follow the sequence to remove the burner carrier assembly.

Disconnect the thermocouple from the rear of the gas valve.

Undo the three compression nuts securing the pipes to the gas valve and remove the two M4 nuts fixing the valve to the valve mounting brackets.

Clean, service or replace the gas valve.

Re-assemble in the reverse order.

Turn on the gas supply, check for soundness and re-commission the appliance.

Replacement of the Injectors

Follow the sequence to remove the burner carrier assembly.

Undo the compression nut on the supply pipe.

Remove the four screws retaining the burner assembly to the carrier and lift away from the injector.

Unscrew the locking nut holding the injector and silencer bracket on the burner carrier.

Remove injectors from assembly. Clean or replace injector.

Re-assemble in reverse order.

Replacement of the Oxy-Pilot Assembly

Note: If the pilot assembly is replaced it must be replaced by an identical unit from the same manufacturer and replaced as a complete unit.

Follow the sequence to remove the burner carrier assembly.

Undo the compression nut on the supply pipe at the pilot.

Carefully pull off the ignition lead.

Disconnect the thermocouple at the end of the gas valve.

Remove the two fixing screws attaching the assembly to burner carrier.

Re-assemble in the reverse order.

Replacement of the burner Assembly

Remove the glass panel as described on page 9 of the users instruction section.

Remove the Loose shapes and the air tray assembly.

Undo the two fixing screws retaining the burner assembly with the carrier.

Lift the burner clear of the silencer and injector tip.

Clean or replace the burner assembly.

Re-assemble in reverse order.

Replacement of the Electronic Control Unit (ECU)

Note: Please note when changing the Electronic Control Unit the handset will need to be re-paired to the handset. (Please see replacement handset for pairing details)

Remove the glass panel as described on page 9 of the users instruction section.

Remove the Loose shapes and the air tray assembly.

Switch off the mains supply from the main supply plug socket.

Undo the two M3 nuts retaining the ECU unit and remove the connection bracket.

Unplug the connection from the ECU board.

Re-assemble in reverse order.

Replacement Handset

Follow the guide stipulated on page 8 of the users instructions "Changing the handset batteries" to load the batteries into the new handset.

The replacement handset will need to be paired again to the ECU unit.

Pairing Handset

- Press eye button to wake handset
- Press &hold star button till menu is displayed –wait for box to fill
- Use wheel to scroll to display – "gas Fire"
- If not paired select – "PAIR"
- While fire is searching disconnect the power lead from the transformer
- Reconnect the transformer (should hear a beep to confirm power reconnected)
- Fire should then be paired

If the handset not pairing try breaking the power link from the transformer – then get the handset to pairing stage and then reconnect the transformer

To delete Pairing

Press and hold ✱ (approx. 5 seconds) until the menu graphic Completes (see Fig 3). This will access the menu (see Fig 4). Use the selector wheel and select the "gas fire" option. Press ✱ & ⏻ simultaneously to delete the current channel. The handset will re-load to "NO DEVICE" (see Fig 4) screen.

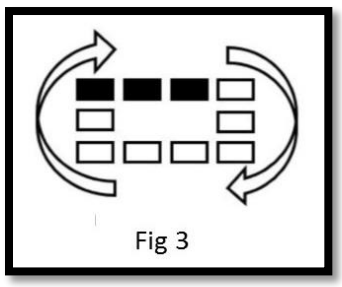

Fig 3

Fig 4

Short Spares List

Component	Part No
Burner Bar	3057
Injector Mrk 460 A NG	2799
ODS Unit/ oxy pilot	7280
Injector Mrk 109 LPG	8133
ODS Unit/ oxy pilot	2703
Control Valve	6590
Electrical Control Unit (ECU)	7150
Ignition Lead	6646
Handset RF	7144
HD Fuel Bed	Walnut: 7500 Silver birch: 7501
Glass Panel	7177

Your Fire Years Parts Extended Warranty

890 HD WARRANTY DETAILS

Please read it carefully and ensure your installer has filled in the gas commissioning checklist, keep it in a safe place so that it is available when your Gas Safe engineer carries out the annual service.

This in no way reduces your statutory rights.

The warranty commences from the date of your purchase you must retain your receipt or invoice as proof of purchase.

This extended warranty specifically excludes glass and soft refractory components and any batteries.

Terms and Conditions

1. The appliance must be installed by a Gas Safe registered person
2. The appliance must be used in accordance with the users instructions.
3. The appliance must be serviced annually by a Gas Safe registered person.
4. The service log must be correctly filled out and record of annual services must be up to date and supported by receipts in each case.
5. This warranty is not transferable and relates to the original installation only.
6. The Registration form must be correctly filled out and returned.
7. The appliance has not been subject to misuse or accident or been modified or repaired by any person than the authorized representative of Charlton and Jenrick Ltd.
8. The registration form must be returned within 1 months of purchase.

For further information please contact the Infinity help desk on 0845 5195991 or visit our web site www.CharltonandJenrick.co.uk.

Important
For future reference we suggest you record the following details here, and keep the receipt as proof of purchase. This information may be asked for when you contact the helpdesk.
Model 890 HD

Serial No									

This information can be found on the label attached to the packaging and on the data badge, which is located on the appliance----------.

Retailer Name:----------

Address :----------

:----------

:----------

Date of Puchase						

Four Year Service Log Details

The following information must be completed to support by receipts as part of the conditions of the extended five year parts warranty and the appliance must be registered by completing and return the registration document (last page of this booklet) to Infinity Fires.

Date of first service						

Engineers Name :_____

Gas Sate no								

_____

Date of second service						

Engineers Name :_____

Gas Sate no								

_____

Date of third service						

Engineers Name : _____

Gas Sate no								

_____

Date of fourth service						

Engineers Name :_____

Gas Sate no								

GAS FIRE COMMISSIONING CHECKLIST

This Commissioning Checklist is to be completed in full by the competent person who commissioned the gas fire as a means of demonstrating compliance with the appropriate Building Regulations and then handed to the customer to keep for future reference.

Failure to install and commission according to the manufacturer's instructions and complete this Benchmark Commissioning Checklist will invalidate the warranty. This does not affect the customer's statutory rights.

Site Requirements	Yes	N/A
Was the chimney checked to ensure it only serves one flue/fire, has no obstructions and is continuous?		
Has any debris at the base of the chimney been removed?		
For brick chimney installations is there enough depth for 12 litres of debris, or precast flues 2 litres of debris? (see instructions for debris gap details)		
Have damper and register plates been removed or locked in the fully open position ensuring correct size of flue is maintained?		
If previously used for solid fuel has the chimney been thoroughly swept?		
If the chimney is pre-cast has the inside of the flue been checked for extruded cement / sealant which must be removed?		
Has the fire place been checked for under-floor air supply which must be sealed off?		
Has the chimney been inspected prior to fitting the gas fire to ensure that it is in good condition?		
Has the structure of the chimney been checked for leakage using a smoke pellet test? (See BS5440-1 for details).		
Ventilation		
Does the installation require any additional ventilation requirements as detailed in the manufacturer's instructions?		
Hearth Requirements- where fitted		
Is the hearth constructed from non -combustible material?		
Is the hearth a minimum of 12mm thick with a minimum floor to top surface of 50mm?(BS5871) or as per manufacturer's instructions?		
Is the hearth for open fronted fires a minimum of 760mm wide and has 300mm projecting from the fire opening (BS6871) or to manufacturer's instructions?		
Mounting height (where applicable) has the fire been installed to the correct mounting height- as per manufacturer's instructions?		
Firebox and Fuel Bed		
Has the fuel bed, coals, pebbles etc. been fitted to manufacturer's instructions?		
Gas Supply		
Has an isolation tap/restrictor inlet elbow been fitted for servicing?		
Has the gas supply been thoroughly purged prior to connection to remove any debris?		
Has a gas tightness test been completed prior to breaking into the gas supply and following completion of installation?(IGEM/UP/1B)		
Record burner gas pressure reading? If only the supply pressure is available a gas rate must be undertaken.(GSIUR REG26/9C)		
Record dynamic inlet gas pressure (working pressure) reading (all gas appliances running)		
Spillage test		
Installation passes smoke match test with any extractor fans turned on (see manufacturer's instructions)		
Installation		
Has the gas fire been installed and commissioned in accordance with manufacturer's instructions?		
Has the fire been installed with the correct clearance to combustible materials, as per manufacturer's instructions?		
The operation of the appliance and controls have been demonstrated to the customer including battery replacement where applicable?		
The manufacturer's literature, including Benchmark Checklist and Service record has been explained and left with the customer?		
Has the appliance been registered with the Local Authority as detailed on the Gas Safe web site and is a legal requirement and forms part of the warranty?		
Customer's Signature: (To confirm satisfactory demonstration and receipt of manufacturer's literature)	Commissioning Engineer's Signature:	

* All installations in England and Wales must be notified to be Local Authority Building Control (LABC) either directly or through a Competent Persons Scheme. A Building Regulations Compliance Certificate will then be issued to the customer.

Register Your 12 Month Warranty with Us Today

To register your appliance at www.charltonandjenrick.co.uk/warranty.

Installer Details

Name _____

Company name _____

Gas safe number _____

Date of installation _____

Your Details

Name _____

Address _____

_____

_____

Post Code _____ Telephone No _____

Product Details

Model : 890 HD Serial No _____

Date Of Purchase _____

This information can be found on the label attached to the packaging and on the data badge.

Where did you purchase this product :

Name _____

Address _____

_____

_____

Post Code _____ Telephone No _____

Infinity 890 HD Packing List

890 HD NG	A-0626 – Glass liners fitted A-0678 – Brick liners fitted A-0679 – Vermiculite liners fitted	Pre- Fix **QX**
890 HD LPG	A-0792 – Glass liners fitted A-0793 – Brick liners fitted A-0794 – Vermiculite liners fitted	Pre- Fix **TE**
Data badge and plate added		
Burner tray / firebox assembly		
Air test completed		
Glass warning label (1409)		
Grommet (1092)		
Silicone sealing strip (4818)		
Liners fitted (sides/rear/top)		
AAA Batteries x 4		
Remote control handset		
Handset holder (7191)		
Airtray (tried for fitment in firebox)		
Top glass retaining bracket fitted		
7mm nut spinner (5435)		
Magnets x 4 (3048)		
Glass tape added to all liner tabs (Only on glass liner version)		
Side liner retaining brackets and spacers fitted		
Oxy pilot gap checked (3mm-4mm)		
Power lead fitted		
Restrictor plate with label		
Emberglow (**NATURAL GAS ONLY**)		
C cell battery holder and warning label		
9v Transformer		
Bag of fixings		
Serial No		
Inspector		

Charlton and Jenrick Ltd

Unit D

Stafford Park 2

Telford

Shropshire

TF3 3AR